```
%*****************************************************************************
2 x 4 x 16 bit Crossbar Switch for Address
7 Feb 02 pak
*****************************************************************************%

TITLE "2x4x16 Address Crossbar";

INCLUDE "adrsbit";

SUBDESIGN adrscrossbar
(axen       : INPUT;
 /cnl0      : INPUT;
 bxen       : INPUT;
 /cnl1      : INPUT;
 cxen       : INPUT;
 /cnl2      : INPUT;
 dxen       : INPUT;
 /cnl3      : INPUT;
 aa[15..0]  : BIDIR;        % Address bus ports  to/from slaves %
 ba[15..0]  : BIDIR;
 ca[15..0]  : BIDIR;
 da[15..0]  : BIDIR;
 xa[15..0]  : INPUT;        % From DSP %
 ya[15..0]  : OUTPUT;       % To DMAC %
)

VARIABLE
    switch[15..0]   : adrsbit;      % Sixteen switch cells %

BEGIN
    switch[15..0].axen = axen;          % Connect switch select inputs to the arbiter
outputs %
    switch[15..0].ayen = !/cnl0;
    switch[15..0].bxen = bxen;
    switch[15..0].byen = !/cnl1;
    switch[15..0].cxen = cxen;
    switch[15..0].cyen = !/cnl2;
% The DSP writes the D-port directly using its external memory interface. A FIFO drives
    these lines directly during DMA %
    switch[15..0].dxen = B"0";
    switch[15..0].dyen = !/cnl3;

    aa[15..0] = switch[15..0].aadrs;    % Wire up port address buses %
    ba[15..0] = switch[15..0].badrs;
    ca[15..0] = switch[15..0].cadrs;
    da[15..0] = switch[15..0].dadrs;
    switch[15..0].xadrs = xa[15..0];
    ya[15..0] = switch[15..0].yadrs;

END;
```

```
--
--  Copyright (C) 1988-2000 Altera Corporation
--  Any megafunction design, and related net list (encrypted or decrypted),
--  support information, device programming or simulation file, and any other
--  associated documentation or information provided by Altera or a partner
--  under Altera's Megafunction Partnership Program may be used only to
--  program PLD devices (but not masked PLD devices) from Altera.  Any other
--  use of such megafunction design, net list, support information, device
--  programming or simulation file, or any other related documentation or
--  information is prohibited for any other purpose, including, but not
--  limited to modification, reverse engineering, de-compiling, or use with
--  any other silicon devices, unless such use is explicitly licensed under
--  a separate agreement with Altera or a megafunction partner.  Title to
--  the intellectual property, including patents, copyrights, trademarks,
--  trade secrets, or maskworks, embodied in any such megafunction design,
--  net list, support information, device programming or simulation file, or
--  any other related documentation or information provided by Altera or a
--  megafunction partner, remains with Altera, the megafunction partner, or
--  their respective licensors.  No other licenses, including any licenses
--  needed under any third party's intellectual property, are provided herein.
--
CHIP adrscrossbar
BEGIN
    |xa14 : INPUT_PIN = 139;
    |ya14 : OUTPUT_PIN = 140;
    |aa14 : BIDIR_PIN = 141;
    |ba14 : BIDIR_PIN = 143;
    |ca14 : BIDIR_PIN = 1;
    |da14 : BIDIR_PIN = 2;
    |xa15 : INPUT_PIN = 5;
    |ya15 : OUTPUT_PIN = 6;
    |aa15 : BIDIR_PIN = 7;
    |ba15 : BIDIR_PIN = 8;
    |ca15 : BIDIR_PIN = 9;
    |da15 : BIDIR_PIN = 10;
    |xa0 :  INPUT_PIN = 11;
    |ya0 :  OUTPUT_PIN = 12;
    |aa0 :  BIDIR_PIN = 14;
    |ba0 :  BIDIR_PIN = 15;
    |ca0 :  BIDIR_PIN = 16;
    |da0 :  BIDIR_PIN = 18;
    |xa1 :  INPUT_PIN = 19;
    |ya1 :  OUTPUT_PIN = 21;
    |aa1 :  BIDIR_PIN = 22;
    |ba1 :  BIDIR_PIN = 23;
    |ca1 :  BIDIR_PIN = 25;
    |da1 :  BIDIR_PIN = 27;
    |xa4 :  INPUT_PIN = 45;
    |ya4 :  OUTPUT_PIN = 46;
    |aa4 :  BIDIR_PIN = 47;
    |ba4 :  BIDIR_PIN = 48;
    |ca4 :  BIDIR_PIN = 49;
    |da4 :  BIDIR_PIN = 53;
    |xa5 :  INPUT_PIN = 55;
    |ya5 :  OUTPUT_PIN = 56;
    |aa5 :  BIDIR_PIN = 60;
    |ba5 :  BIDIR_PIN = 61;
    |ca5 :  BIDIR_PIN = 62;
    |da5 :  BIDIR_PIN = 63;
    |xa6 :  INPUT_PIN = 66;
    |ya6 :  OUTPUT_PIN = 67;
    |aa6 :  BIDIR_PIN = 68;
    |ba6 :  BIDIR_PIN = 69;
    |ca6 :  BIDIR_PIN = 70;
    |da6 :  BIDIR_PIN = 71;
    |xa7 :  INPUT_PIN = 74;
```

```
    |ya7 :  OUTPUT_PIN = 75;
    |aa7 :  BIDIR_PIN = 78;
    |ba7 :  BIDIR_PIN = 79;
    |ca7 :  BIDIR_PIN = 80;
    |da7 :  BIDIR_PIN = 81;
    |xa8 :  INPUT_PIN = 82;
    |ya8 :  OUTPUT_PIN = 83;
    |aa8 :  BIDIR_PIN = 84;
    |ba8 :  BIDIR_PIN = 86;
    |ca8 :  BIDIR_PIN = 87;
    |da8 :  BIDIR_PIN = 88;
    |xa10 : INPUT_PIN = 98;
    |ya10 : OUTPUT_PIN = 99;
    |aa10 : BIDIR_PIN = 100;
    |ba10 : BIDIR_PIN = 101;
    |ca10 : BIDIR_PIN = 102;
    |da10 : BIDIR_PIN = 103;
    |xa11 : INPUT_PIN = 106;
    |ya11 : OUTPUT_PIN = 107;
    |aa11 : BIDIR_PIN = 108;
    |ba11 : BIDIR_PIN = 109;
    |ca11 : BIDIR_PIN = 110;
    |da11 : BIDIR_PIN = 111;
    |xa12 : INPUT_PIN = 116;
    |ya12 : OUTPUT_PIN = 117;
    |aa12 : BIDIR_PIN = 118;
    |ba12 : BIDIR_PIN = 119;
    |ca12 : BIDIR_PIN = 120;
    |da12 : BIDIR_PIN = 121;
    |xa13 : INPUT_PIN = 131;
    |ya13 : OUTPUT_PIN = 132;
    |aa13 : BIDIR_PIN = 133;
    |ba13 : BIDIR_PIN = 134;
    |ca13 : BIDIR_PIN = 136;
    |da13 : BIDIR_PIN = 137;
    |/cnl3 :    INPUT_PIN = 138;
    |cxen : INPUT_PIN = 142;
    |bxen : INPUT_PIN = 128;
    |axen : INPUT_PIN = 126;
    |ya2 :  OUTPUT_PIN = 29;
    |aa2 :  BIDIR_PIN = 31;
    |ba2 :  BIDIR_PIN = 34;
    |ca2 :  BIDIR_PIN = 35;
    |da2 :  BIDIR_PIN = 36;
    |/cnl2 :    INPUT_PIN = 37;
    |xa3 :  INPUT_PIN = 38;
    |ya3 :  OUTPUT_PIN = 39;
    |aa3 :  BIDIR_PIN = 40;
    |ba3 :  BIDIR_PIN = 41;
    |ca3 :  BIDIR_PIN = 42;
    |da3 :  BIDIR_PIN = 43;
    |xa9 :  INPUT_PIN = 90;
    |ya9 :  OUTPUT_PIN = 91;
    |aa9 :  BIDIR_PIN = 92;
    |ba9 :  BIDIR_PIN = 93;
    |ca9 :  BIDIR_PIN = 96;
    |da9 :  BIDIR_PIN = 97;
    |/cnl0 :    INPUT_PIN = 32;
    |/cnl1 :    INPUT_PIN = 30;
    |xa2 :  INPUT_PIN = 28;
    DEVICE = EPM3256ATC144-7;
END;

INTERNAL_INFO adrscrossbar
BEGIN
```

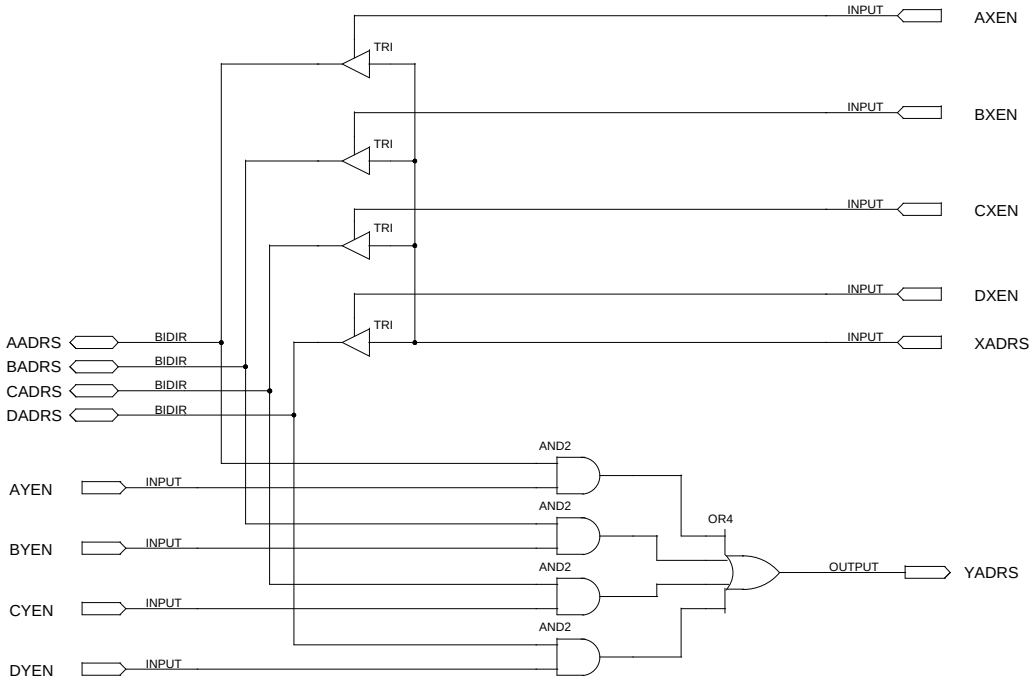

The DSP (X-port) always sends address to the slaves.
The DMAC (Y-port) always reads address from the slaves.

TITLE	2X4 ADRS SWITCH, ONE BIT		
COMPANY	Fermilab		
DESIGNER	Paul Kasley		
SIZE C	NUMBER 1.00	REV A	
DATE 10:42a 2-27-2002		SHEET 1	OF 1