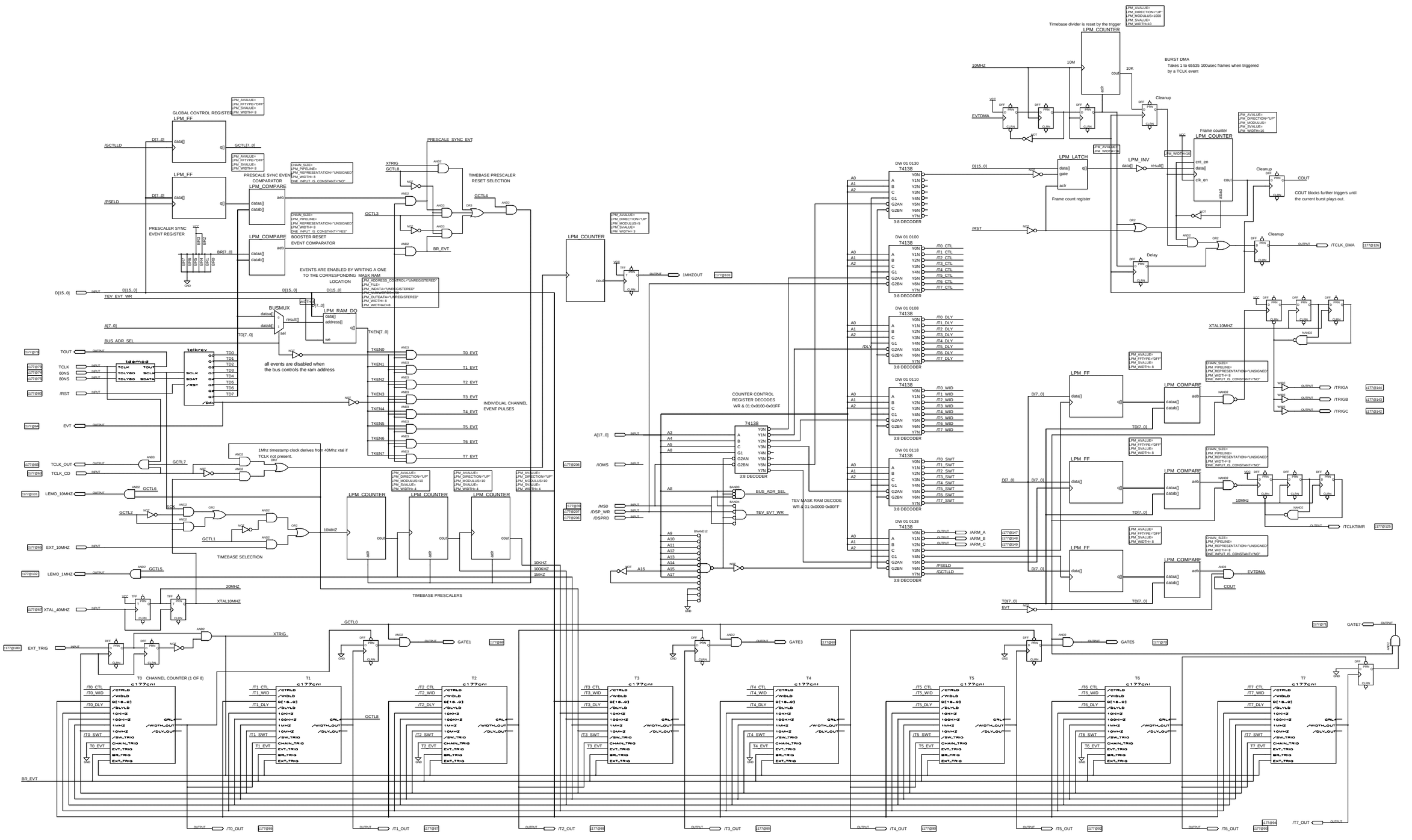

TITLE	HRM-II IP177
COMPANY	Fermilab
DESIGNER	Paul Kasley
SIZE F	NUMBER 1.00 REV A
DATE 11:24a 9-05-2006	SHEET 1 OF 1

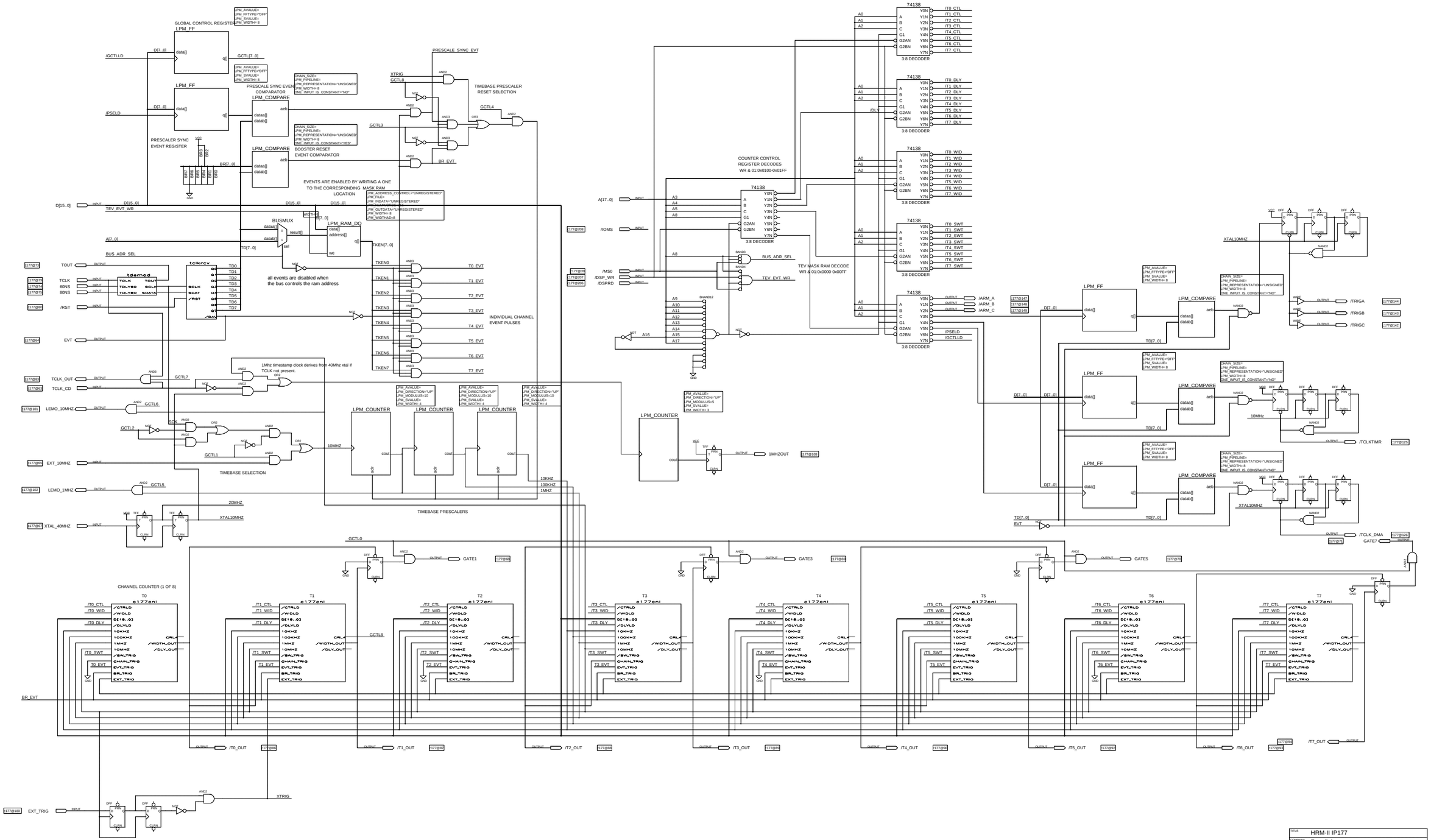

TITLE	HRM-II IP177
COMPANY	Fermilab
DESIGNER	Paul Kasley
SIZE F	NUMBER 1.00 REV A
DATE 3:56p 9-30-2005	SHEET 1 OF 1

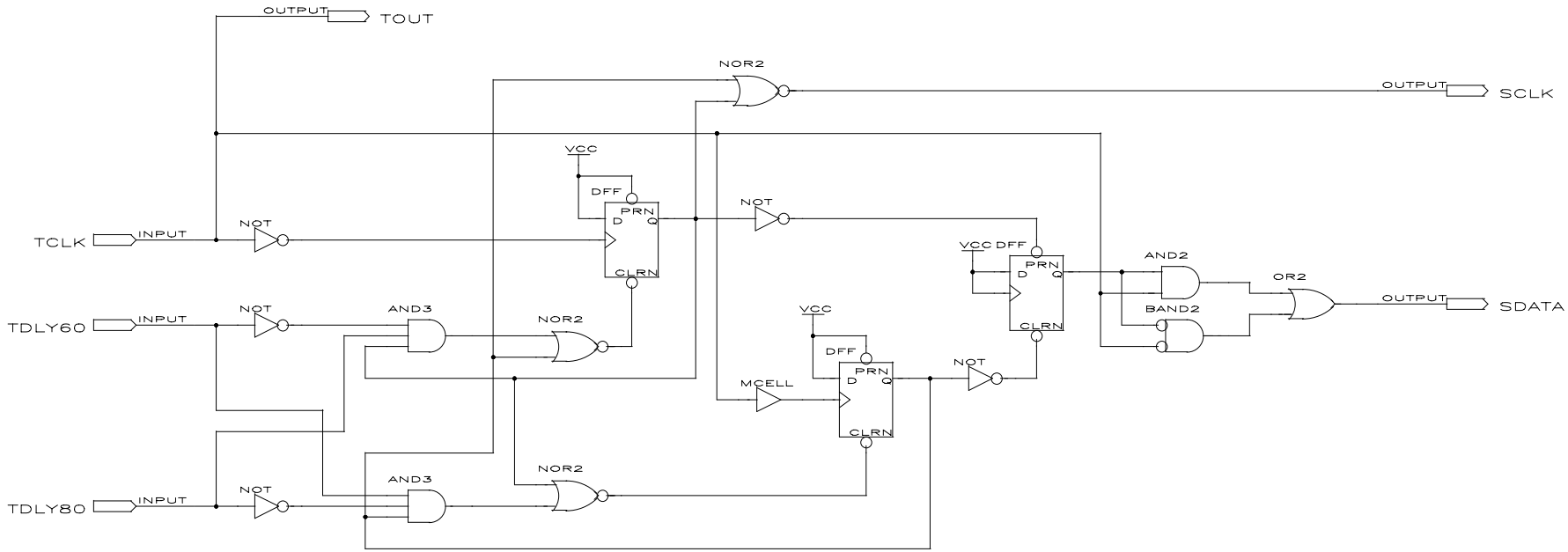

TDEMOD.GDF

TITLE TCLK DEMODULATOR		
COMPANY Fermilab		
DESIGNER PAK		
SIZE C	NUMBER 1.00	REV A
DATE 3:46p 4-01-2002	SHEET 1 OF 1	

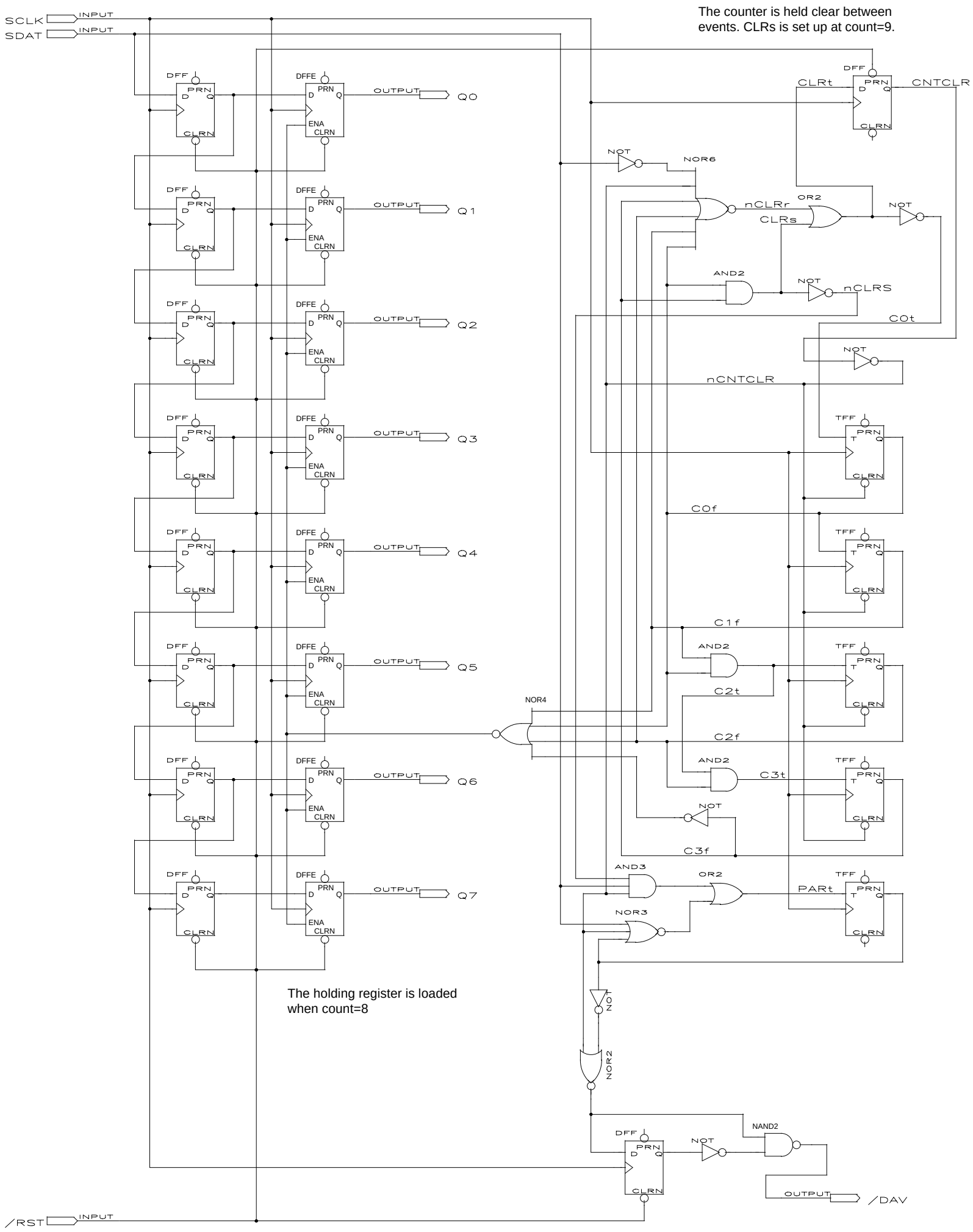

The holding register is loaded when count=8

/DAV is 100ns low pulse that occurs after data is transferred to the holding register and if the received parity is good.

TITLE TCLK RCVR		
COMPANY FERMILAB		
DESIGNER PAK		
SIZE DV	NUMBER 1.00	REV A
DATE 3:46p 4-01-2002	SHEET 1 OF 1	

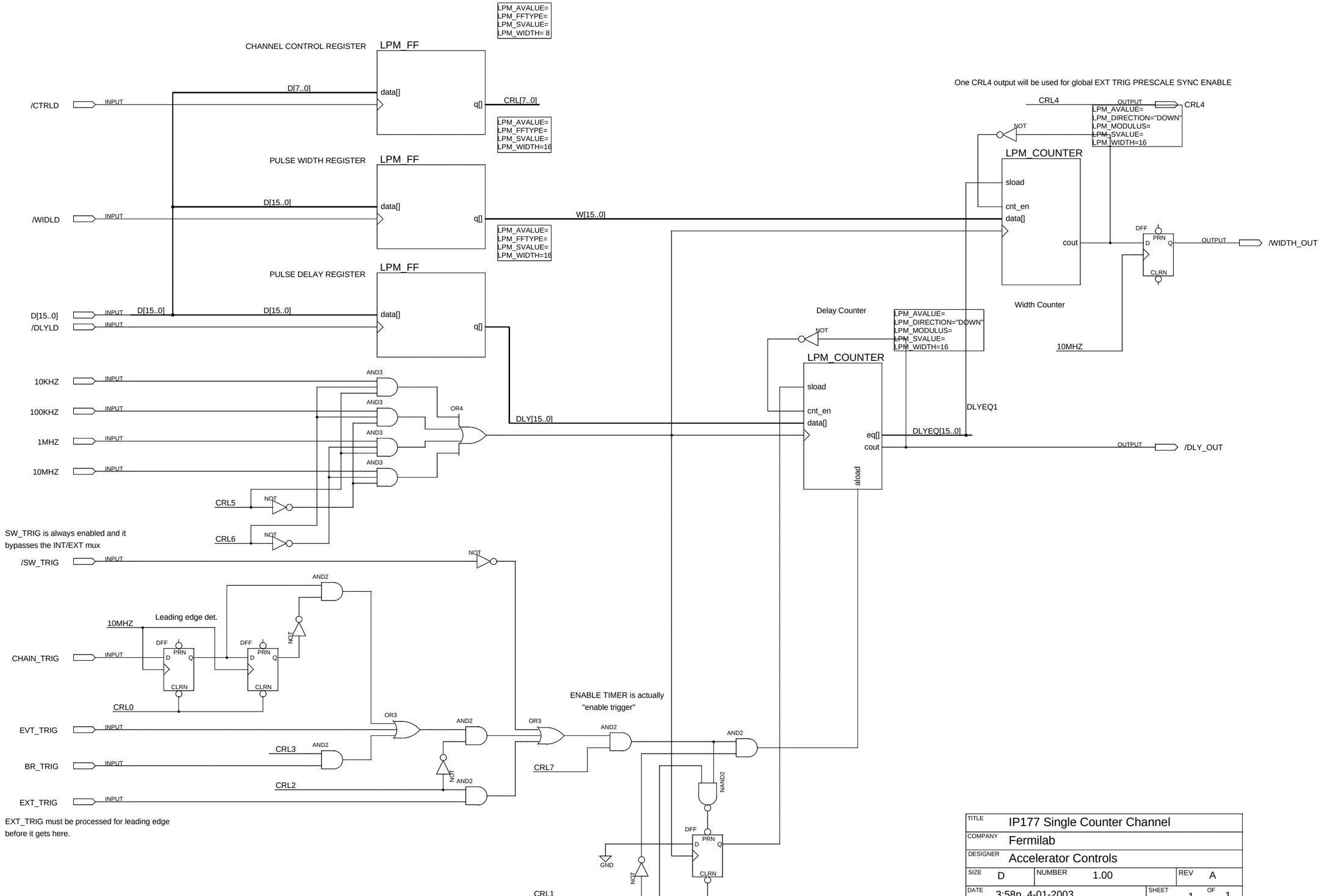

TITLE	IP177 Single Counter Channel		
COMPANY	Fermilab		
DESIGNER	Accelerator Controls		
SIZE D	NUMBER 1.00	REV A	
DATE 3:58p 4-01-2003		SHEET 1	OF 1