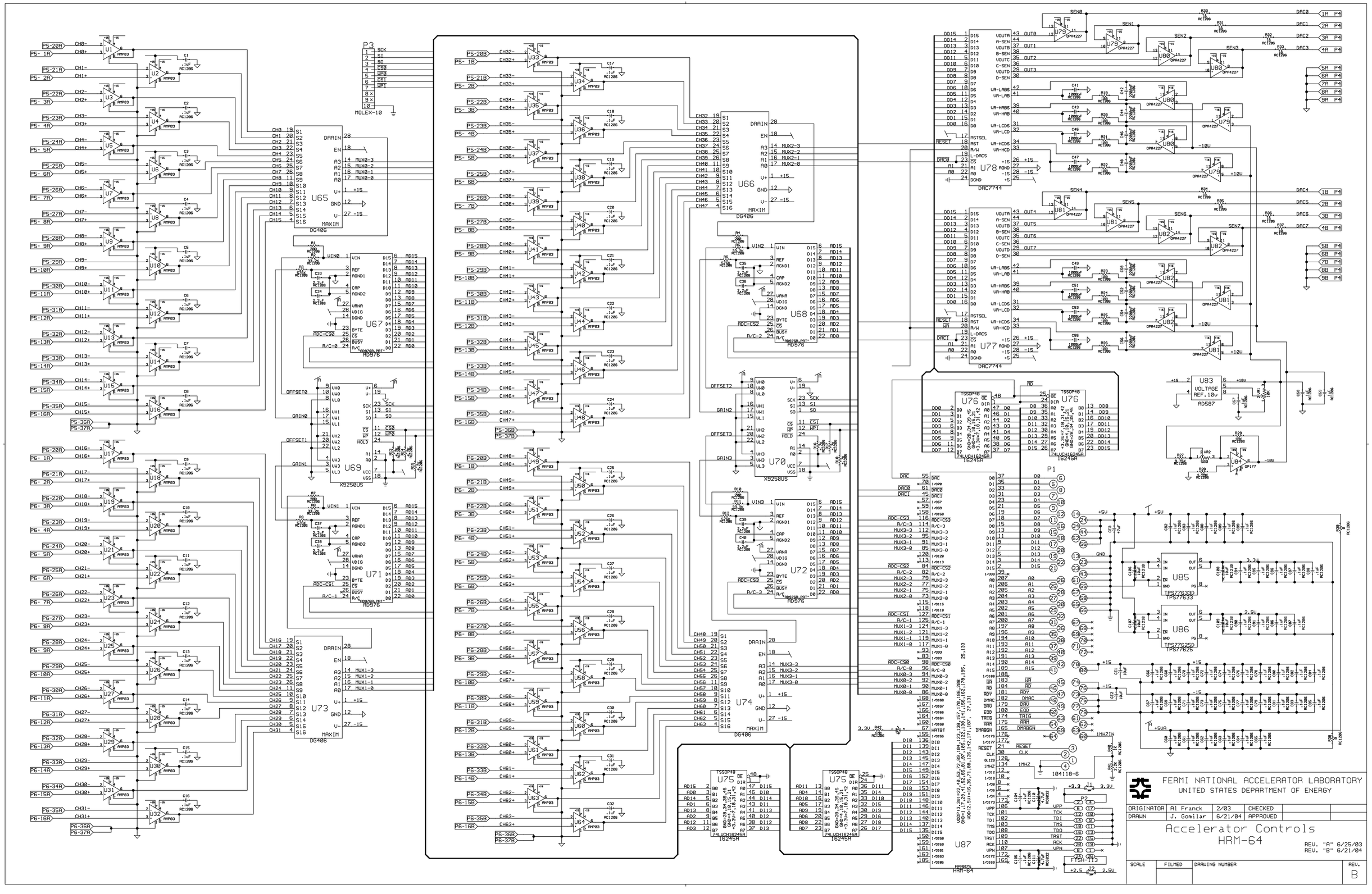
FERMI NATIONAL ACCELERATOR LABORATORY
UNITED STATES DEPARTMENT OF ENERGY
ORIGINATOR Al Franck 2/03 CHECKED
DRAWN J. Gomilar 6/21/04 APPROVED
Accelerator Controls
HRM-64
REV. "A" 6/25/03
REV. "B" 6/21/04
SCALE FILMED DRAWING NUMBER REV. B