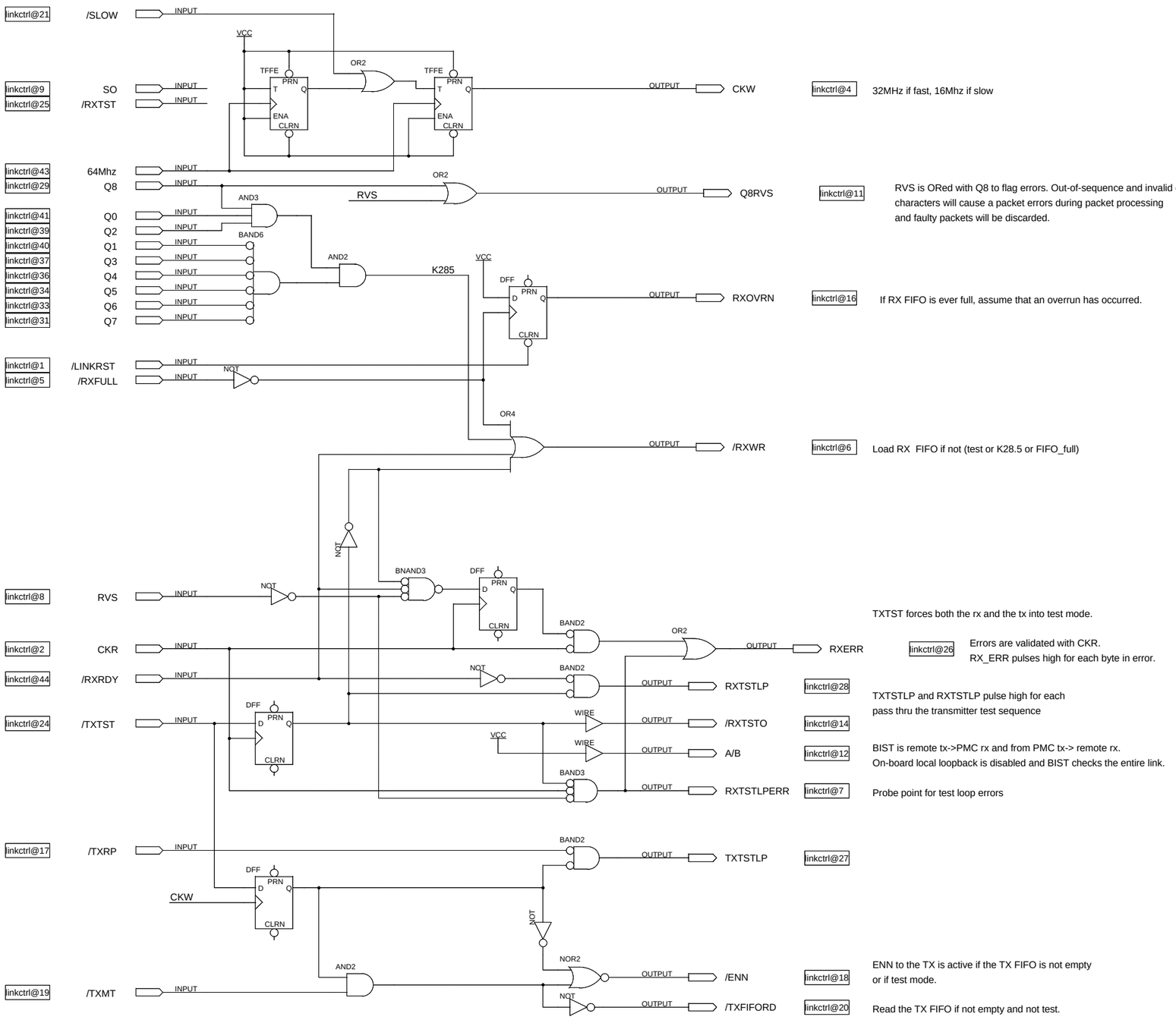

32MHz if fast, 16Mhz if slow

RVS is ORed with Q8 to flag errors. Out-of-sequence and invalid control characters will cause a packet errors during packet processing and faulty packets will be discarded.

If RX FIFO is ever full, assume that an overrun has occurred.

Load RX FIFO if not (test or K28.5 or FIFO_full)

TXTST forces both the rx and the tx into test mode.

Errors are validated with CKR.
RX_ERR pulses high for each byte in error.

TXTSTLP and RXTSTLP pulse high for each pass thru the transmitter test sequence

BIST is remote tx->PMC rx and from PMC tx-> remote rx.
On-board local loopback is disabled and BIST checks the entire link.

Probe point for test loop errors

ENN to the TX is active if the TX FIFO is not empty or if test mode.

Read the TX FIFO if not empty and not test.

TITLE	Hot-link Control		
COMPANY	Fermilab		
DESIGNER	Kasley		
SIZE D	NUMBER 1.00	REV A	
DATE 11:30a 6-10-2003	SHEET 1	OF 1	