DRAWING MADE IN THIRD ANGLE PROJECTION

THIS DRAWING IS UNPUBLISHED. RELEASED FOR PUBLICATION ,19 .

© COPYRIGHT 19 BY AMP INCORPORATED. ALL INTERNATIONAL RIGHTS RESERVED.

LOC	DIST
CF	39

P	F	ZONE	LTR	DESCRIPTION	DATE	APPD
			O	REL	7-3-96	LM/JS
			A	REV PER EC 0B20-1178-96	1-3-97	LM/JS

1. 0.00076 [.000030] MIN GOLD ON CONTACT SURFACE, 0.00381 [.000150] MIN TIN-LEAD ON SOLDER TAILS ALL OVER 0.00127-0.00203 [.000050-.000080] NICKEL.
2. 0.00200-0.00300 [.000079-.000118] BRIGHT TIN-LEAD OVER 0.00254 [.0001] COPPER.

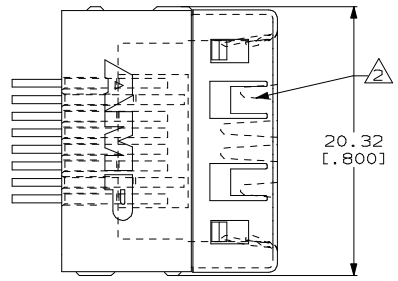

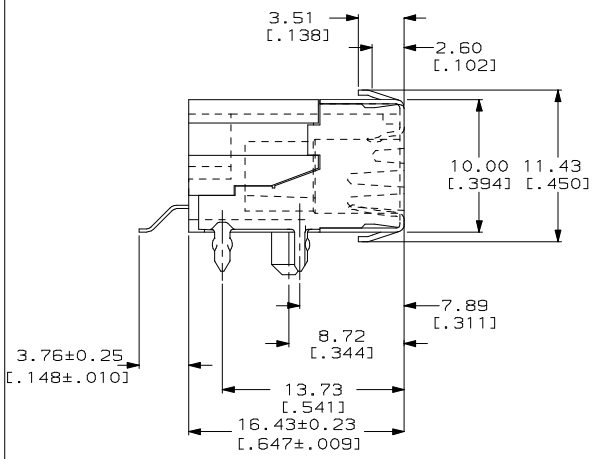

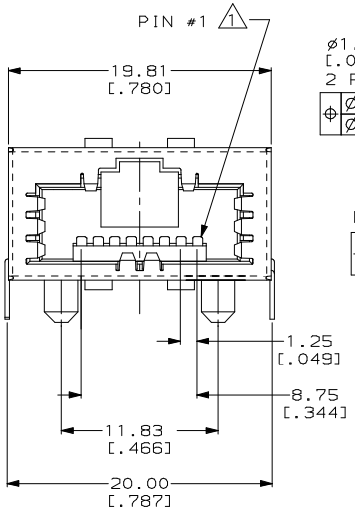

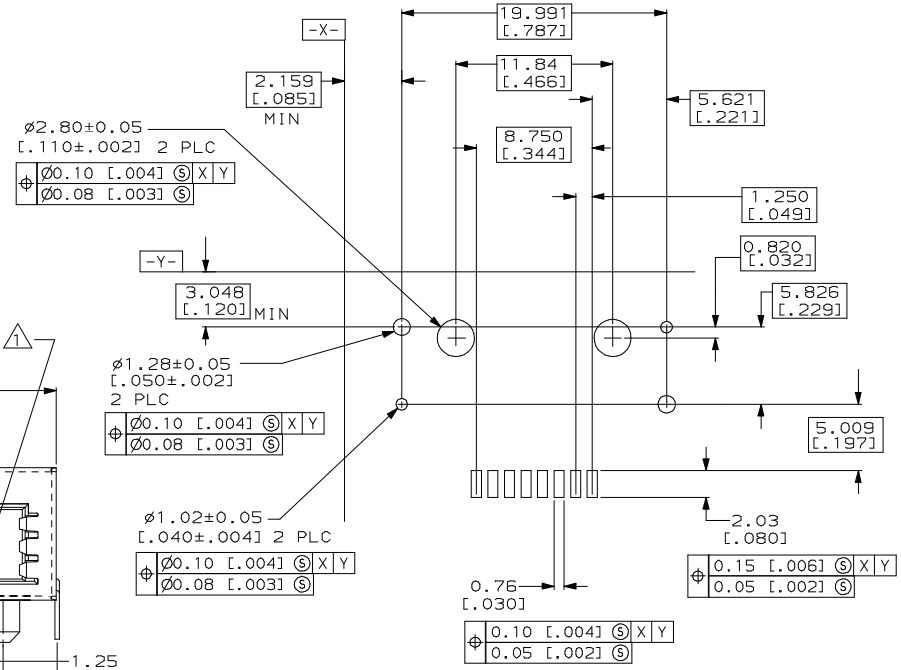

RECOMMENDED PC BOARD LAYOUT

SINGLE CONNECTOR ONLY

636180

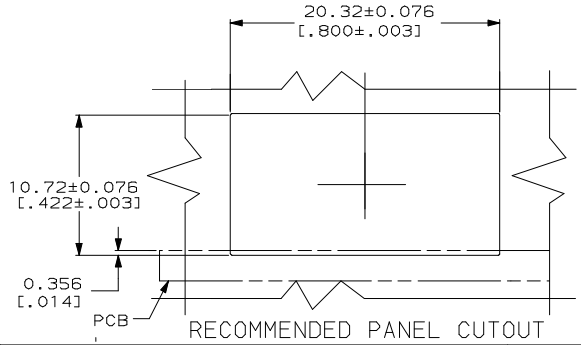

RECOMMENDED PANEL CUTOUT

636180-1
PART NUMBER

DO NOT SCALE PRINT.
UNLESS SPECIFIED
DIMENSIONS IN mm [INCHES]
TOLERANCES ON :
2 PLC DEC ±0.13 [.005]
3 PLC DEC ±0.05 [.002]
ANGLES ± -

MATERIAL
HOUSING: POLYPHTHALAMIDE GLASS REINFORCED
SHIELD: COPPER ZINC ALLOY
CONTACT: PHOSPHOR BRONZE

FINISH
SEE NOTE 1 2

DR L. MORNINGSTAR 7-3-96
CHK J. STARON 7-3-96
APPD J. STARON 7-3-96
APPD M. FOGG 7-3-96
PRODUCT SPEC -
APPLICATION SPEC -
WEIGHT -

AMP INCORPORATED
Harrisburg, Pa. 17105

NAME
RECEPTACLE ASSEMBLY,
8 POSN,
RIGHT ANGLE, HSSDC

SIZE C | FSCM NO 00779 | DRAWING NO 636180
SCALE 4:1 | SHEET 1 OF 1

CUSTOMER DRAWING

AMP 1471-6 REV 3-89

29-FEB-96 11:04:51 amp06193 /home/amp06193/7918

DRAWING MADE IN THIRD ANGLE PROJECTION
THIS DRAWING IS UNPUBLISHED. RELEASED FOR PUBLICATION ,19 .
© COPYRIGHT 19 BY AMP INCORPORATED. ALL INTERNATIONAL RIGHTS RESERVED.

LOC	DIST
AD	39

P	F	ZONE	LTR	DESCRIPTION	DATE	APPD
			G	REV PER ECN 2094	7-15-88	DLC
			H	REV LOC & DIST AD-4171	3-90	BF
			J	REV PER EC 0010-1222-93	10/1/94	DS

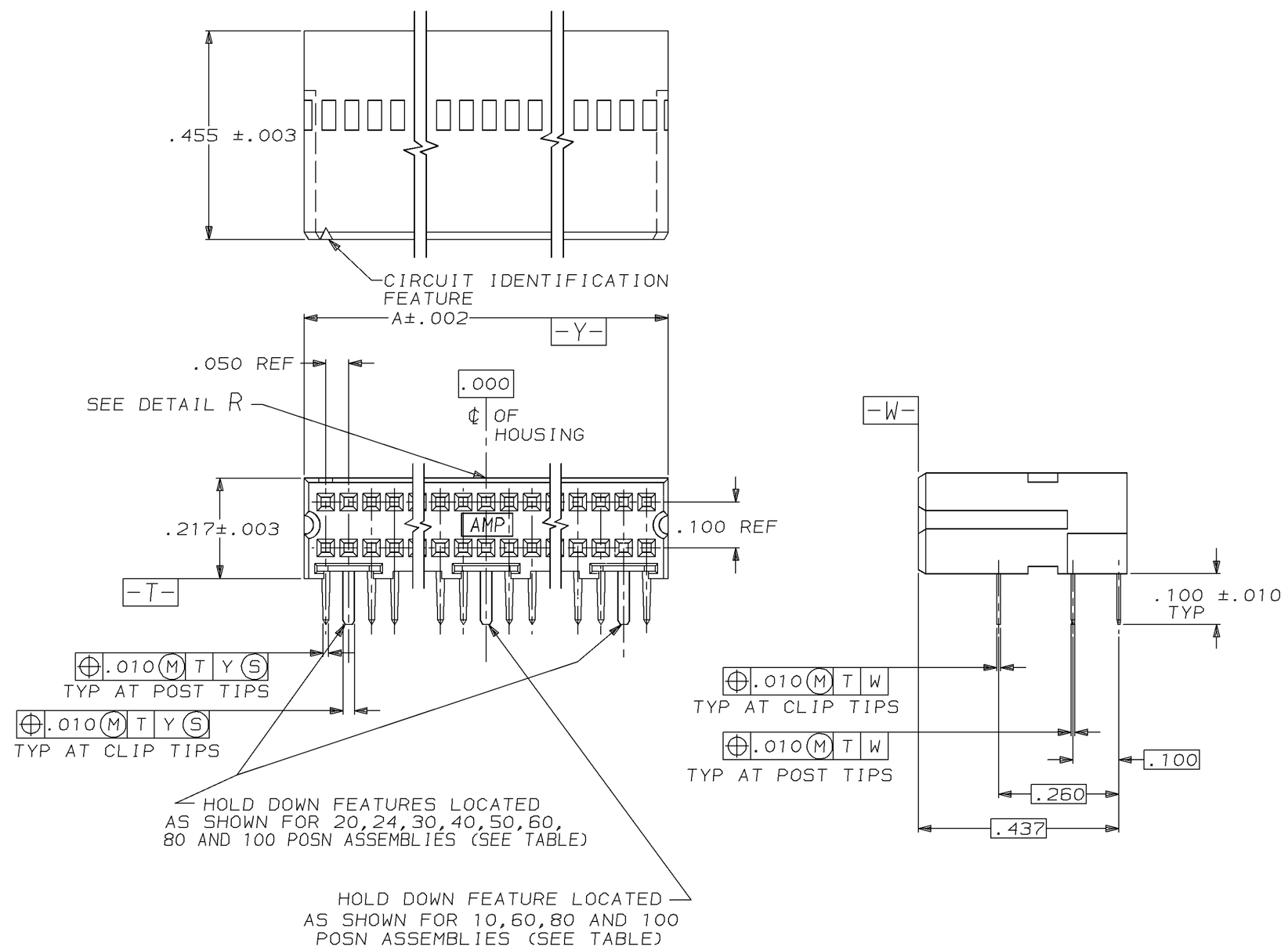

1. CONTACT AREA PLATED WITH .000030 GOLD; SOLDER TAILS PLATED WITH .000150 TIN-LEAD; ALL OVER .000050 NICKEL
2. POINT OF MEASUREMENT FOR GOLD THICKNESS IS .030 FROM MATING END OF CONTACT

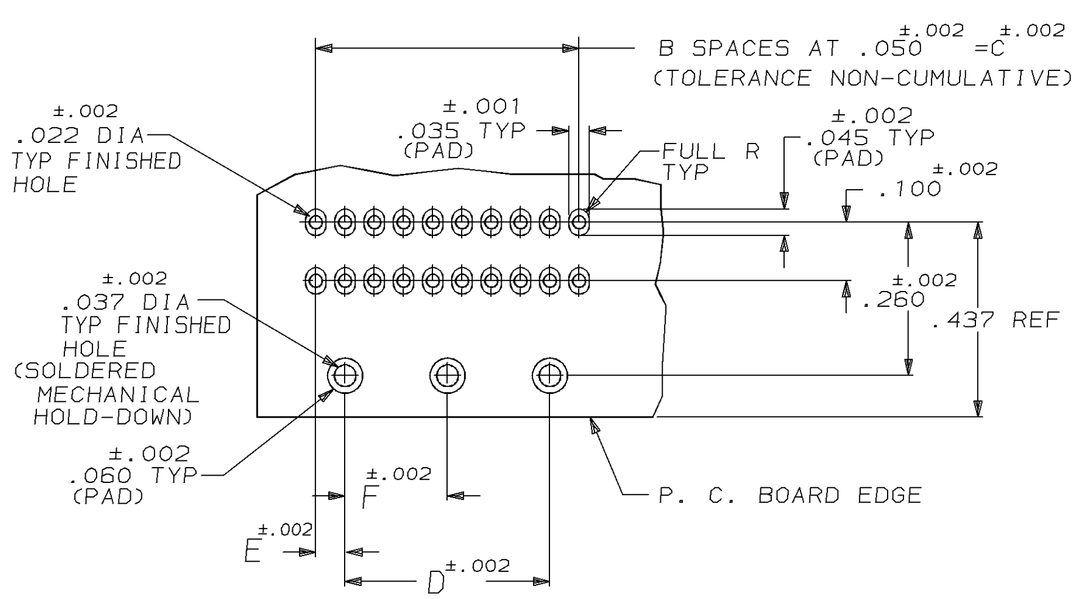

RECOMMENDED HOLE PATTERN

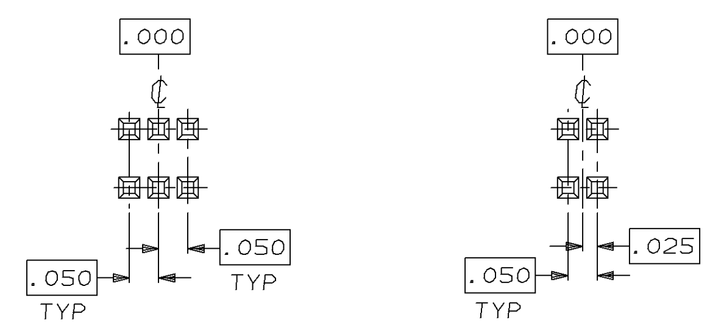

BASIC DIMENSIONS FOR EVEN NO OF SPACES (SEE TABLE)

BASIC DIMENSIONS FOR ODD NO OF SPACES (SEE TABLE)

DETAIL R

	F	E	D	C	B	A	NO OF POSN	PART NUMBER
OBSOLETE	–	.050	.450	.550	11	.644	24	103911-9
	1.175	.050	2.350	2.450	49	2.544	100	103911-8
	–	.050	.600	.700	14	.794	30	103911-7
	.925	.050	1.850	1.950	39	2.044	80	103911-6
	–	.050	.850	.950	19	1.044	40	103911-5
	–	.050	1.100	1.200	24	1.294	50	103911-4
	.675	.050	1.350	1.450	29	1.544	60	103911-3
	–	.050	.350	.450	9	.544	20	103911-2
	–	.100	–	.200	4	.294	10	103911-1

PART NO

DO NOT SCALE PRINT. UNLESS SPECIFIED DIMENSIONS IN INCHES TOLERANCES ON : 2 PLC DEC ± - 3 PLC DEC ± - ANGLES ± -

MATERIAL: HOUSING: THERMOPLASTIC COLOR-BLACK; CONTACT: COPPER ALLOY

FINISH 1 2

DR 3-20-86 D CLOUSER
CHK 3-20-86 J S STARON
APPD 3-20-86 J S STARON
APPD 3-20-86 C SNYDER
PRODUCT SPEC 108-1093
APPLICATION SPEC 114-25031
WEIGHT _

AMP INCORPORATED Harrisburg, Pa. 17105

NAME: RECEPTACLE ASSEMBLY, RIGHT ANGLE, AMPMODU System 50 ®

SIZE D | FSCM NO 00779 | DRAWING NO 103911

SCALE 5:1 | SHEET 1 OF 1

CUSTOMER DRAWING

THIS DRAWING IS UNPUBLISHED. RELEASED FOR PUBLICATION -,-
© COPYRIGHT - BY TYCO ELECTRONICS CORPORATION. ALL RIGHTS RESERVED.

LOC	DIST
AD	39

REVISIONS

P	LTR	DESCRIPTION	DATE	DWN	APVD
	T	REV PER EC 0G3C-0046-01	19FEB01	MB	DS

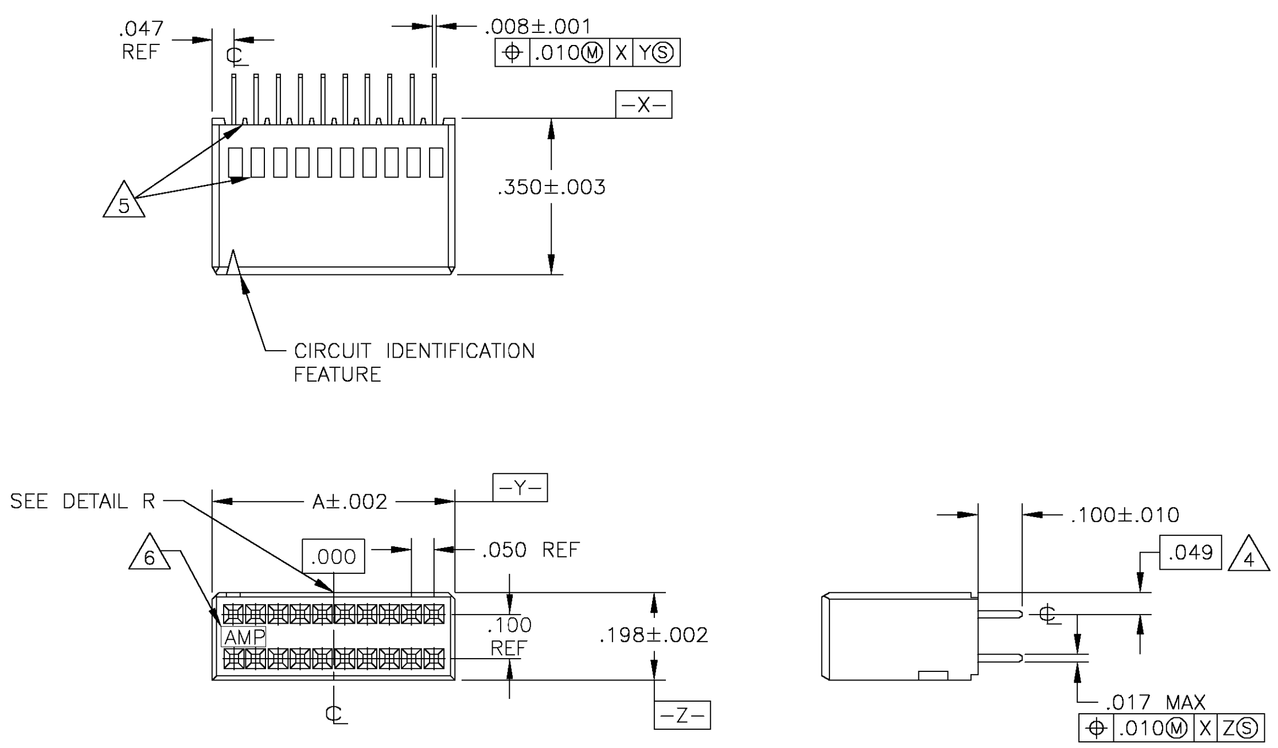

1. CONTACT AREA PLATED WITH .000030 GOLD; SOLDER TAILS PLATED WITH .000150 TIN-LEAD, ALL OVER .000050 NICKEL
2. POINT OF MEASUREMENT FOR GOLD PLATING THICKNESS IS .030 FROM MATING END OF CONTACT
3. HOUSING: THERMOPLASTIC, COLOR-BLACK. POST: COPPER ALLOY.
4. THE NOTED DIMENSIONS APPLY AT THE INTERSECTION OF THE POST AND HOUSING.
5. WINDOWS ON SIDE OF HOUSING AND RIBS ON BOTTOM OF HOUSING ARE MOLDERS OPTION.
6. AMP LOGO PRESENCE AND LOCATION OPTIONAL.

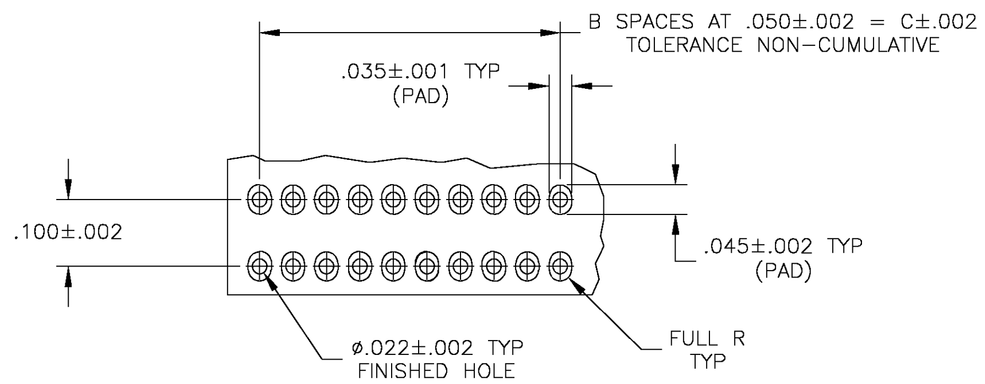

RECOMMENDED HOLE PATTERN
SCALE 6:1

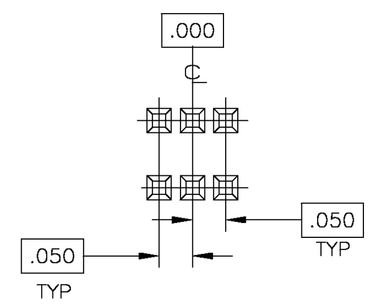

BASIC DIMENSIONS FOR
EVEN NO OF SPACES
(SEE TABLE)

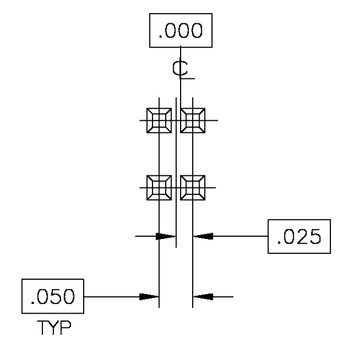

BASIC DIMENSIONS FOR
ODD NO OF SPACES
(SEE TABLE)

DETAIL R
SCALE 6:1

	C	B	A	NO OF POS	PART NUMBER
	1.650	33	1.744	68	1-104078-3
OBSOLETE	1.750	35	1.844	72	1-104078-2
OBSOLETE	.350	7	.444	16	1-104078-1
	.800	16	.894	34	1-104078-0
	.550	11	.644	24	104078-9
	2.450	49	2.544	100	104078-8
	1.950	39	2.044	80	104078-7
	1.450	29	1.544	60	104078-6
	1.200	24	1.294	50	104078-5
	.700	14	.794	30	104078-4
	.200	4	.294	10	104078-3
	.950	19	1.044	40	104078-2
	.450	9	.544	20	104078-1

THIS DRAWING IS A CONTROLLED DOCUMENT.

DIMENSIONS: INCHES

TOLERANCES UNLESS OTHERWISE SPECIFIED:
0 PLC ± -
1 PLC ± -
2 PLC ± -
3 PLC ± .005
4 PLC ± - ± -
ANGLES

MATERIAL 3
FINISH 1 2

DWN D CLOUSER 1-15-87
CHK T KOCHER 1-15-87
APVD -
PRODUCT SPEC 108-1093
APPLICATION SPEC 114-25031
WEIGHT -
CUSTOMER DRAWING

tyco Electronics
Tyco Electronics Corporation
Harrisburg, PA

NAME
RECEPTACLE ASSEMBLY,VERTICAL,
AMPMODU® System 50

SIZE	CAGE CODE	DRAWING NO	RESTRICTED TO
A1	00779	C-104078	-

SCALE 4:1 SHEET 1 OF 1 REV T

DRAWING MADE IN THIRD ANGLE PROJECTION

THIS DRAWING IS UNPUBLISHED. RELEASED FOR PUBLICATION ,19 .
© COPYRIGHT 19 BY AMP INCORPORATED. ALL INTERNATIONAL RIGHTS RESERVED.

LOC	DIST
AD	39

P	F	ZONE	LTR	DESCRIPTION	DATE	APPD
			D	REV & REDRAWN PER 2093	3-1-88	DLC
			E	REV PER ECN AR2482 JPG	6-13-89	–
			F	REV LOC & DIST AD-4171	3-90	BF
			G	REV PER AD-5808	08/20/91	KIH
			H	REV PER 0010-0650-93	7/30/93	JM
			J	REV PER EC 0010-0212-94	2/94	DG
			K	REV PER EC 0010-1222-93	10/1/94	DS
			L	REV PER EC 0010-1416-94	10/1/94	DS
			M	RE-ACTIVATE -8 PER EC 0010-0910-96	12 DEC 96	DLS
			N	REV PER 0410-0190-96	10.15/97	DS
			P	REV PER OG3C-0047-99	15JUL99	DS
			R	REV PER OG3C-0052-00	31JAN00	DS

1. CONTACT AREA PLATED WITH .000030 GOLD; SOLDER TAILS PLATED WITH .000150 MIN TIN-LEAD; ALL OVER .000050 MIN NICKEL
2. POINT OF MEASUREMENT FOR PLATING THICKNESS
3. THE NOTED DIMENSION APPLIES AT THE INTERSECTION OF THE POST AND HOUSING.

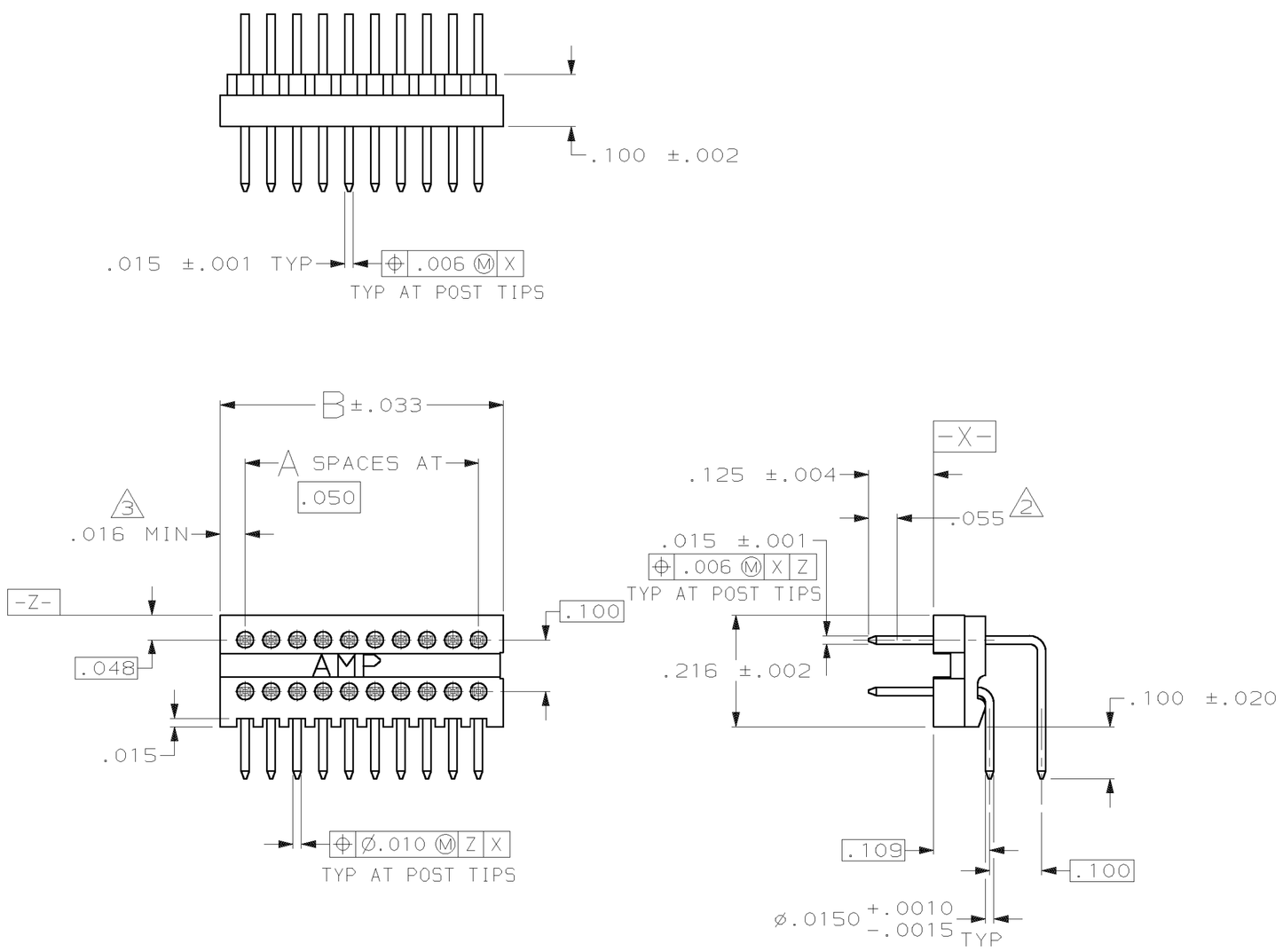

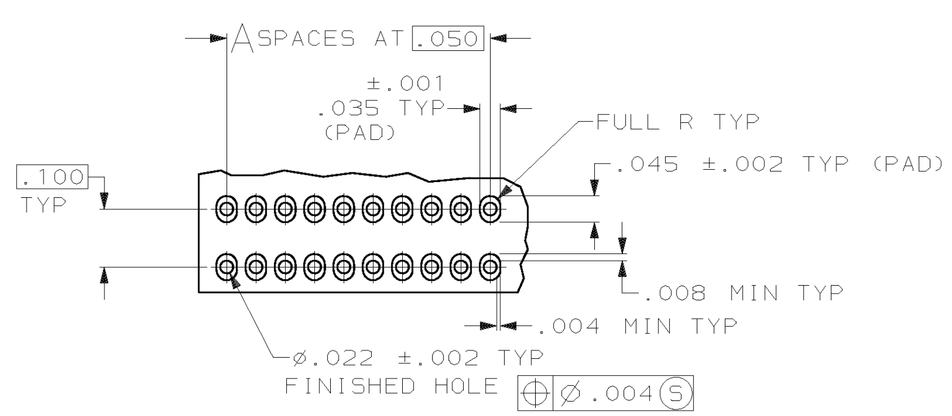

RECOMMENDED HOLE PATTERN
FOR MANUAL INSERTION

	B	A	NO OF POSN	PART NUMBER
	2.515	49	100	1-104118-7
	2.015	39	80	1-104118-6
OBSOLETE	1.815	35	72	1-104118-5
	1.515	29	60	1-104118-4
OBSOLETE	1.115	21	44	1-104118-3
	1.015	19	40	1-104118-2
OBSOLETE	.865	16	34	1-104118-1
	.765	14	30	1-104118-0
OBSOLETE	.665	12	26	104118-9
OBSOLETE	.615	11	24	104118-8
	.515	9	20	104118-7
OBSOLETE	.415	7	16	104118-6
OBSOLETE	.365	6	14	104118-5
OBSOLETE	.315	5	12	104118-4
	.265	4	10	104118-3
OBSOLETE	.215	3	8	104118-2
	1.265	24	50	104118-1

DO NOT SCALE PRINT.
UNLESS SPECIFIED
DIMENSIONS IN INCHES
TOLERANCES ON :
2 PLC DEC ± -
3 PLC DEC ± .005
ANGLES ± -

MATERIAL
HOUSING: THERMOPLASTIC
COLOR-BLACK
CONTACT: COPPER ALLOY

FINISH 1 2

DR 10-3-88 D CLOUSER
CHK 10-3-88 T ZOLA
APPD 10-3-88 T ZOLA
APPD 10-3-88 C SNYDER
PRODUCT SPEC 108-1093
APPLICATION SPEC 114-25031
WEIGHT –

AMP | AMP INCORPORATED Harrisburg, Pa. 17105

NAME
HEADER ASSEMBLY,
RIGHT ANGLE, UNSHROUDED,
DOUBLE ROW,
AMPMODU® System 50

SIZE D | FSCM NO 00779 | 104118
SCALE 5:1 | SHEET 1 OF 1

CUSTOMER DRAWING