PART NO.	CA-08HSSDCP-FXXX

REVISIONS				
LTR	DESCRIPTION		DATE	APPROVED
A	INITIAL RELEASE SEE DO 3896	BW	3-17-00	A.J.
B	SEE DO 4065	BW	6-30-00	L.F.

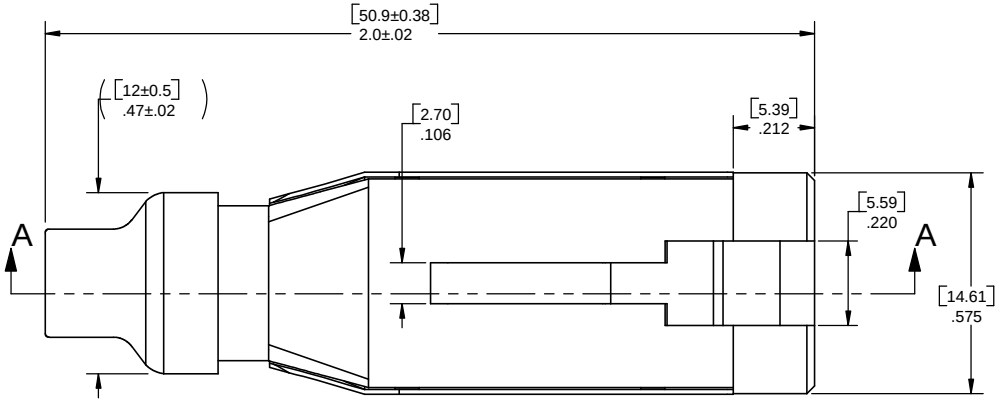

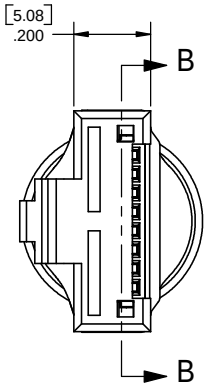

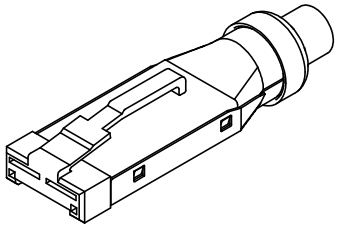

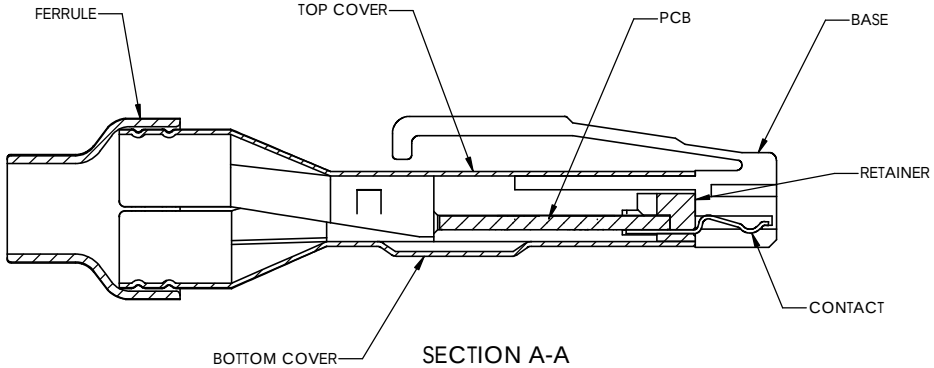

SECTION A-A

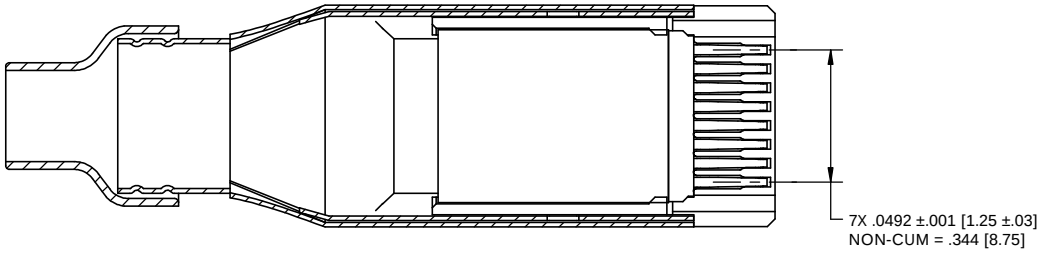

SECTION B-B

ORDERING NOMENCLATURE:

CA - 08 HSSDCP - F X X X

- **NUMBER OF CONTACT POS**
- **HIGH SPEED SERIAL DATA CONNECTOR**
- **PLUG**
- **PLATING:**
  - F= CONTACT AREA: .000030 [.000762] GOLD
    SOLDER AREA: .000150 [.00381] 90/10 TIN/LEAD ALLOY
    UNDERPLATE: .000075 [.00190] NICKEL
- **FERRULE SIZES**
  - 1 = 28-30AWG
  - 2 = 22-26AWG
- **PLASTIC BACKSHELL**
  - 1 = WITH
  - 0 = WITHOUT
- **PCB(UNEQUALIZED)**
  - 1 = WITH
  - 0 = WITHOUT

3. SPECIFICATIONS:

ENVIRONMENTAL

- TEMPERATURE RANGE : -10°C TO +50°C

MECHANICAL

- INSULATOR MATERIAL : GLASS FILLED NYLON, BLACK, UL94V-0
- CONTACT MATERIAL : PHOSPHOR BRONZE
- DURABILITY : 500 CYCLES

ELECTRICAL

- CURRENT RATING : 1.5 AMP
- VOLTAGE RATING : 30V DC
- INSULATOR RESISTANCE : >100 MEGOHMS INITIAL
- CONTACT RESISTANCE : <35 MILLIOHMS INITIAL, NON-SHIELD CONTACTS
  <42 MILLIOHMS INITIAL, SHIELD CONTACTS

2. CONNECTOR SHOWN WITHOUT OVERMOLD OR BACKSHELL.

1. INTERPRET DIMENSIONS AND TOLERANCES PER ASME Y14.5M - 1994

NOTES: UNLESS OTHERWISE SPECIFIED

DIMENSIONS ARE IN INCHES TOLERANCES ARE:

DECIMALS	ANGLES
.XX ±.010	±3°
.XXX ±.005	

DIMENSIONS IN BRACKETS [X.XX] ARE IN MILLIMETERS TOLERANCES ARE:

DECIMALS	ANGLES
.X ±.25	±3°
.XX ±.13	

DO NOT SCALE DRAWING

APPROVALS		DATE
DRAWN	B. WATSON	3-17-00
CHECKED	A. JOCHEN	3-17-00

THE INFORMATION AND DESIGN DISCLOSED HEREIN WAS ORIGINATED BY AND IS THE PROPERTY OF CIRCUIT ASSEMBLY CORPORATION. CIRCUIT ASSEMBLY CORPORATION RESERVES ALL PATENT, PROPRIETARY, DESIGN, MANUFACTURING, REPRODUCTION, USE AND SALES RIGHTS THERETO, AND TO ANY ARTICLE DISCLOSED HEREIN EXCEPT TO THE EXTENT RIGHTS ARE EXPRESSLY GRANTED TO OTHERS. THE FOREGOING DOES NOT APPLY TO VENDOR PROPRIETARY RIGHTS.

CIRCUIT ASSEMBLY CORP.
18 THOMAS ST., IRVINE, CALIFORNIA 92618-2777

CONNECTOR ASSEMBLY
HSSDC

SIZE	CODE IDENT NO.	DRAWING NO.	REV.
C	52072	620403	B

SCALE: 4:1 SHEET 1 OF 1

Fibre Channel (1.0625 & 1.25 Gbps)

METHODE ELECTRONICS, INC.

INTER-CABINET

110-XX-XXXX
DB9 Plug-DB9 Plug Fibre Channel Cable Assembly

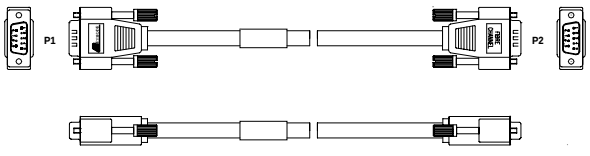

Length (M)	AWG		Part Number
	Without Equalisation	With Equalisation	
1.0	30	-	110-30-100
3.0	30	-	110-30-300
5.0	30	-	110-30-500
10.0	28	-	110-28-1000
15.0	24	-	110-24-1500
20.0	22	-	110-22-2000
25.0	-	22	110-22-2500E
30.0	-	22	110-22-3000E

* Custom lengths available on request

120-XX-XXXX
DB9 Plug – HSSDC Fibre Channel Cable Assembly

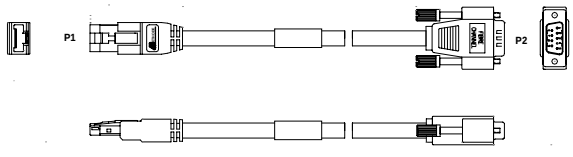

Length (M)	AWG		Part Number
	Without Equalisation	With Equalisation	
1.0	30	-	120-30-100
3.0	30	-	120-30-300
5.0	30	-	120-30-500
10.0	28	-	120-28-1000
15.0	24	-	120-24-1500
20.0	22	-	120-22-2000
25.0	-	22	120-22-2500E
30.0	-	22	120-22-3000E

* Custom lengths available on request

122-XX-XXXX
HSSDC – HSSDC Fibre Channel Cable Assembly

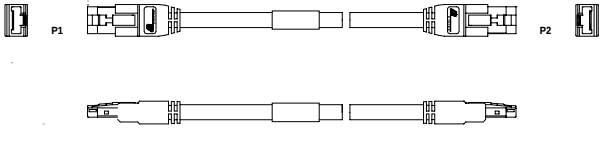

Length (M)	AWG		Part Number
	Without Equalisation	With Equalisation	
1.0	30	-	122-30-100
3.0	30	-	122-30-300
5.0	30	-	122-30-500
10.0	28	-	122-28-1000
15.0	24	-	122-24-1500
20.0	22	-	122-22-2000
25.0	-	22	122-22-2500E
30.0	-	22	122-22-3000E

* Custom lengths available on request

Features

- Typical cable impedance of 150Ω, quad duplex construction.
- Data rates 1.0625 and 1.25 Gigabits / second supported.
- Available up to 20 meters without equalisation and up to 30 meters with equalisation.
- Cable shield terminated through 360.
- 1 x 3 IDAC 0.100" assemblies provide reliable internal interconnect.
- Optical conversion support for extended drive distances 500M multi-mode, 10KM single-mode, provided by a range of **MIA** (media interface adapter) cables.

US Operations
Methode Technical Components
7401 West Wilson Ave
IL 60706
US
Tel. : 00 1 708 424 1900
Fax : 00 1 708 424 7212
Email : infomtc@methode.com

European Operations
Methode Electronics Ireland Ltd
Annacotty Industrial Estate
Co. Limerick
Ireland
Tel. : 00 353 61 330 013
Fax : 00 353 61 330 803
Email : info@methode.ie

PART NUMBER	LENGTH (METER)	AWG	DESCRIPTION
621724-1	10	28	HSSDC CABLE ASSEMBLY, UNEQUALIZED
621724-2	5	30	HSSDC CABLE ASSEMBLY, UNEQUALIZED
621724-3	3	30	HSSDC CABLE ASSEMBLY, UNEQUALIZED
621724-4	1	30	HSSDC CABLE ASSEMBLY, UNEQUALIZED
621724-5	0.5	30	HSSDC CABLE ASSEMBLY, UNEQUALIZED
621724-6	20	24	HSSDC CABLE ASSEMBLY, UNEQUALIZED
621724-7	2	30	HSSDC CABLE ASSEMBLY, UNEQUALIZED
621735-1	NA	NA	HSSDC RIGHT ANGLE RECEPTACLE, 6 POSN
621754-1	NA	NA	HSSDC STRADDLE MOUNT, 6 POSN
636136-1	30	24	HSSDC CABLE ASSEMBLY, EQUALIZED
636136-2	25	24	HSSDC CABLE ASSEMBLY, EQUALIZED
636136-3	20	24	HSSDC CABLE ASSEMBLY, EQUALIZED
636137-1	NA	NA	HSSDC RIGHT ANGLE RECEPTACLE, LEFT KEY, SSA, 8 POSN
636145-1	NA	NA	HSSDC STRADDLE MOUNT, 8 POSN
636152-1	NA	NA	HSSDC, LOOPBACK ASSEMBLY
636158-1	NA	NA	HSSDC, PANEL MOUNT, 2 BAY, 6 POSN, REAR BOARD LOCKS
636159-1	NA	NA	HSSDC, PANEL MOUNT, 2 BAY, 6 POSN, FRONT BOARD LOCKS
636160-1	NA	NA	HSSDC, PANEL MOUNT, 1 BAY, 6 POSN, FRONT BOARD LOCKS
636180-1	NA	NA	HSSDC RIGHT ANGLE RECEPTACLE, 8 POSN
636181-1	NA	NA	HSSDC, PANEL MOUNT, 1 BAY, 8 POSN, LEFT KEY, FRONT BOARD LOCKS
636182-1	NA	NA	HSSDC, PANEL MOUNT, 2 BAY, 8 POSN, LEFT KEY, FRONT BOARD LOCKS
636183-1	NA	NA	HSSDC, PANEL MOUNT, 2 BAY, 8 POSN, LEFT KEY, REAR BOARD LOCKS
636198-1	NA	NA	HSSDC, EVALUATION KIT

DRAWING MADE IN THIRD ANGLE PROJECTION

THIS DRAWING IS UNPUBLISHED. RELEASED FOR PUBLICATION ,19 .

© COPYRIGHT 19 BY AMP INCORPORATED. ALL INTERNATIONAL RIGHTS RESERVED.

LOC	DIST
CF	39

P	F	ZONE	LTR	DESCRIPTION	DATE	APPD
			O	REL 95-7918-044-4,-6,-7 & -8	2-29-96	LM/JS
			A	REV PER EC 0B20-0436-96	5-22-96	LM/JS
			B	REV PER EC 0B20-0540-96	6-18-96	LM/JS
			C	REV PER EC 0B20-0572-96	6-27-96	LM/JS
			D	REV PER EC 0B20-0629-96	7-29-96	LM/JS
			E	REV PER EC 0B20-1131-96	11-22-96	LM/JS

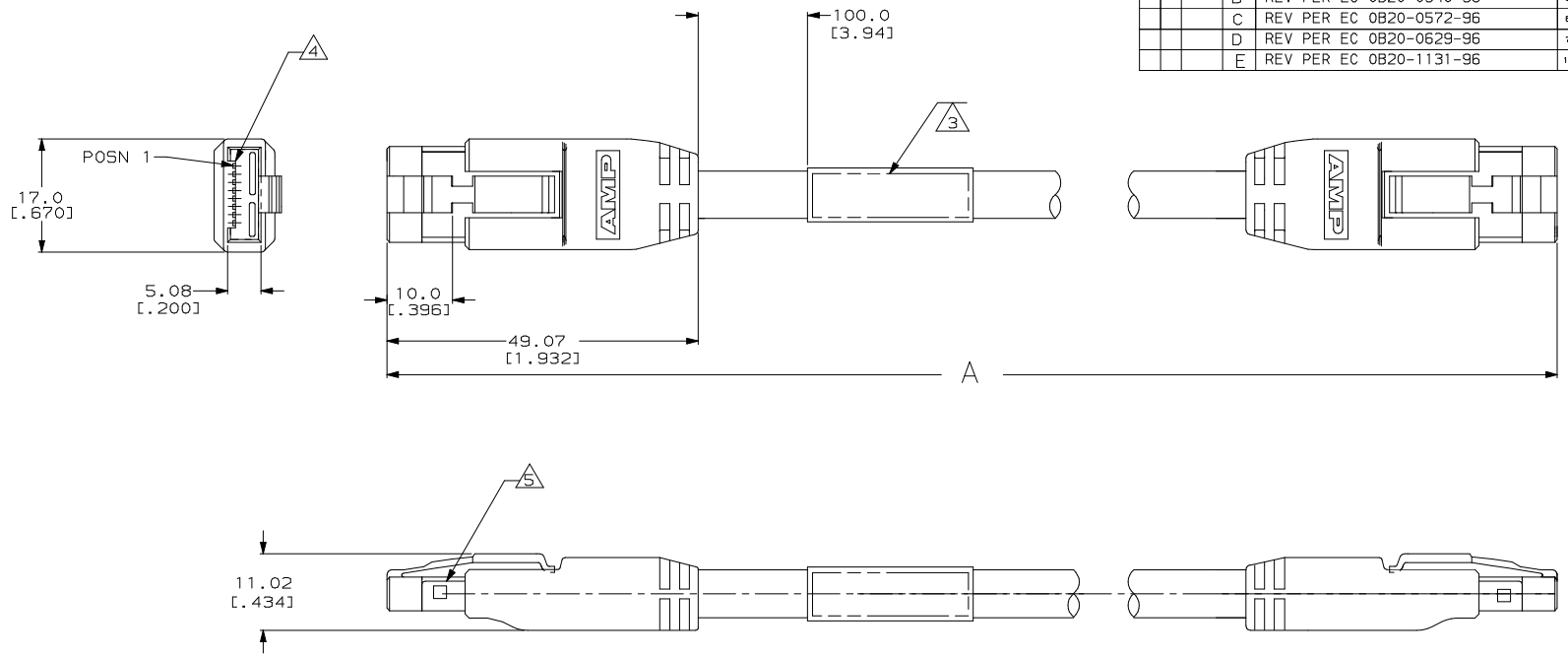

CABLE SIZE AWG	A	PART NUMBER
24	15M±0.15M [49.21FT±.50FT]	621724-8
30	2M±0.07M [6.56FT±.25FT]	621724-7
24	20M±0.15M [65.6FT±.50FT]	621724-6
30	0.5M±0.04M [1.64FT±.12FT]	621724-5
30	1M±0.04M [3.28FT±.12FT]	621724-4
30	3M±0.07M [9.84FT±.25FT]	621724-3
30	5M±0.07M [16.40FT±.25FT]	621724-2
28	10M±0.15 [32.75FT±.50FT]	621724-1

1. CHARACTERISTIC IMPEDANCE: 150Ω±10Ω (MEASURED DIFFERENTIALLY).
2. LINE TO LINE SKEW (WITHIN A PAIR): LESS THEN 200 psec (MEASURED AT 50%).
3. ASSY IDENTIFICATION LABEL TO BE LOCATED AS SHOWN, LABEL TO READ:
   AMP INCORPORATED
   AMP PART NO
   DATE CODE
   DATE CODE TO BE FOUR DIGITS & APPEAR AS YEAR/WEEK (EXAMPLE 9542).
4. PLATING 0.00076 [.000030] MIN GOLD ON CONTACT SURFACE, UNDER PLATING 0.001-0.003 [.000040-.00012] NICKEL.
5. PLATING: 0.050 [.0020] MIN BRIGHT TIN-LEAD, UNDERPLATE 0.025 [.00100] MIN COPPER.
6. POSITIONS 2 & 7 ARE NOT COMMONED IN CABLE ASSEMBLY.

DO NOT SCALE PRINT.
UNLESS SPECIFIED
DIMENSIONS IN mm [INCHES]
TOLERANCES ON :
2 PLC DEC ±0.13[.005]
3 PLC DEC ±0.51 [.020]
ANGLES ± -

MATERIAL: -

FINISH: 4 5

DR S.J.MAGARO 8/1/95
CHK J. STARON 2-29-96
APPD J. STARON 2-29-96
APPD M. FOGG 2-29-96
PRODUCT SPEC -
APPLICATION SPEC -
WEIGHT -

AMP INCORPORATED
Harrisburg, Pa. 17105

NAME: CABLE ASSY, HSSDC, 8 POSN

SIZE C | FSCM NO 00779 | DRAWING NO 621724

SCALE 2:1 | SHEET 1 OF 2

CUSTOMER DRAWING

621724

AMP 1471-6 REV 3-89

27-JUN-96 11:22:55 amp06193 /home/amp06193/edmmod

DRAWING MADE IN THIRD ANGLE PROJECTION

THIS DRAWING IS UNPUBLISHED. RELEASED FOR PUBLICATION ,19 .

© COPYRIGHT 19 BY AMP INCORPORATED. ALL INTERNATIONAL RIGHTS RESERVED.

LOC	DIST
CF	39

P	F	ZONE	LTR	DESCRIPTION	DATE	APPD
			E	SEE SHT#1	11-22-96	JS

WIRING SCHEMATIC

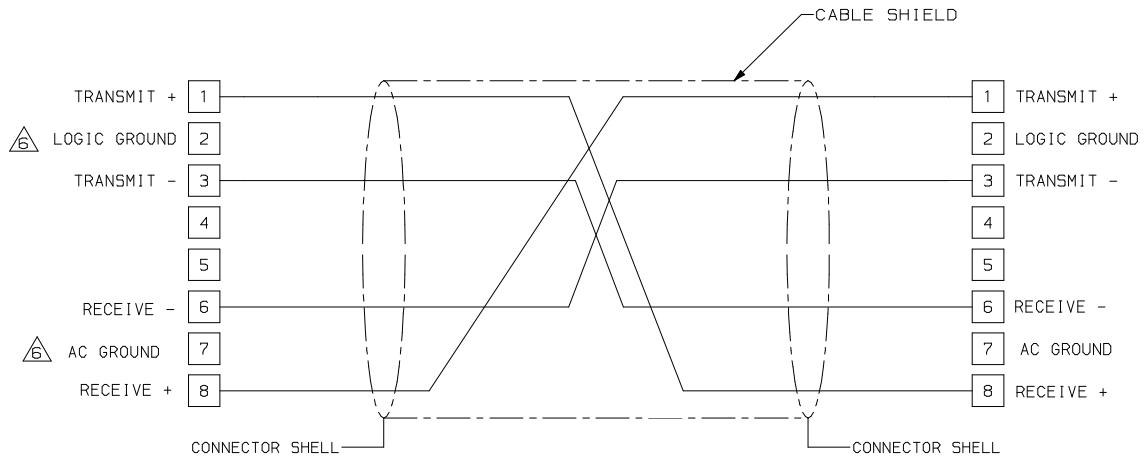

621724

DO NOT SCALE PRINT.
UNLESS SPECIFIED
DIMENSIONS IN mm [INCHES]
TOLERANCES ON :
2 PLC DEC ± -
3 PLC DEC ± 0.51[.020]
ANGLES ± -

MATERIAL
-

FINISH
-

DR	S.J.MAGARO	8/1/95
CHK	J. STARON	2-29-96
APPD	J. STARON	2-29-96
APPD	M. FOGG	2-29-96
PRODUCT SPEC	-	
APPLICATION SPEC	-	
WEIGHT	-	

AMP INCORPORATED
Harrisburg, Pa. 17105

NAME
CABLE ASSY, HSSDC,
8 POSN

SIZE	FSCM NO	DRAWING NO
C	00779	621724
SCALE 2:1		SHEET 2OF2

CUSTOMER DRAWING

AMP 1471-6 REV 3-89

27-JUN-96 11:28:52 amp06193 /home/amp06193/edmmod

DRAWING MADE IN THIRD ANGLE PROJECTION

THIS DRAWING IS UNPUBLISHED. RELEASED FOR PUBLICATION ,19 .

© COPYRIGHT 19 BY AMP INCORPORATED. ALL INTERNATIONAL RIGHTS RESERVED.

LOC	DIST
CF	39

P	F	ZONE	LTR	DESCRIPTION	DATE	APPD
			O	REL 95-7918-043-1,-2 &-3	6-3-96	LM/JS
			A	REV PER EC 0B20-0540-96	6-18-96	LM/JS
			B	REV PER EC 0B20-0572-96	6-27-96	LM/JS

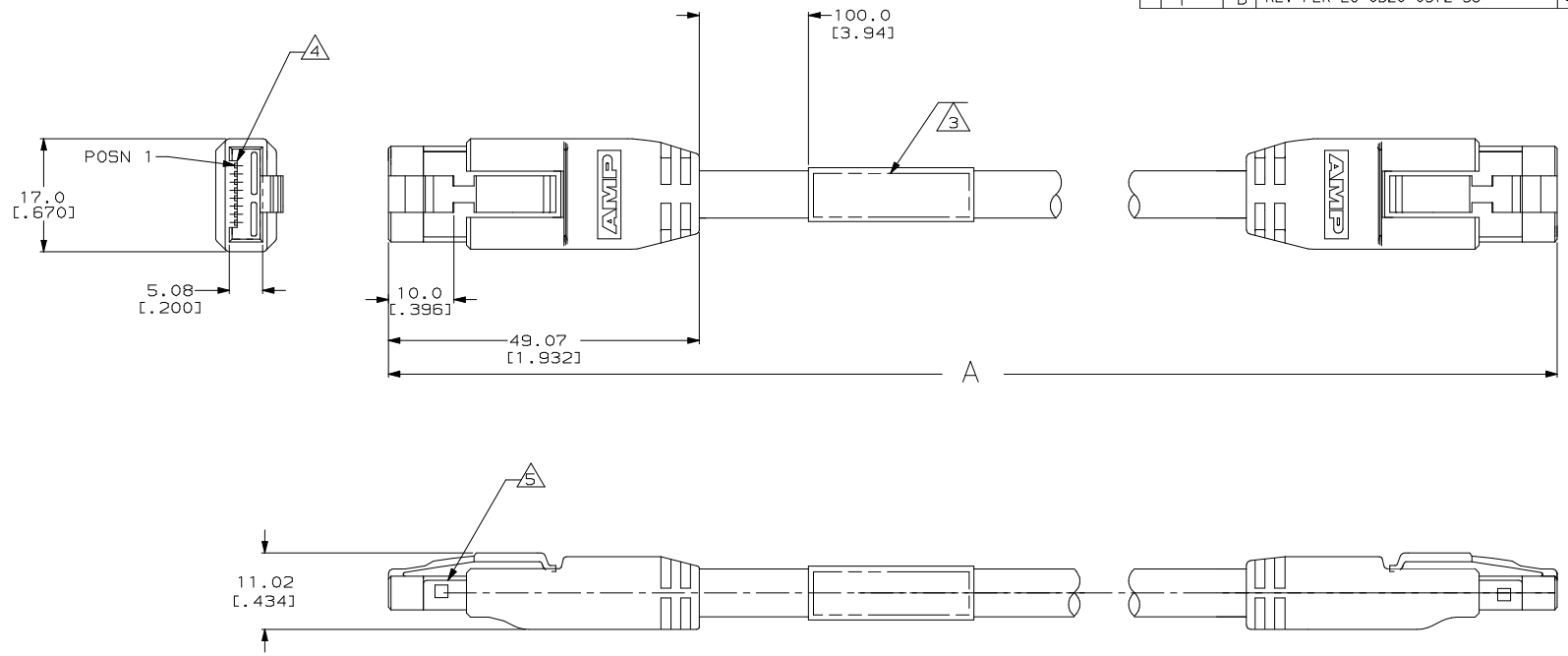

1. CABLE, 24 AWG, CHARACTERISTIC IMPEDANCE 150Ω±10Ω (MEASURED DIFFERENTIALLY).
2. LINE TO LINE SKEW (WITHIN A PAIR): LESS THEN 200 psec (MEASURED AT 50%).
3. ASSY IDENTIFICATION LABEL TO BE LOCATED AS SHOWN, LABEL TO READ:
   AMP INCORPORATED
   AMP PART NO
   DATE CODE
   DATE CODE TO BE FOUR DIGITS & APPEAR AS YEAR/WEEK (EXAMPLE 9542).
4. PLATING 0.00076 [.000030] MIN GOLD ON CONTACT SURFACE, UNDER PLATING 0.001-0.003 [.000040-.00012] NICKEL.
5. PLATING: 0.050 [.0020] MIN BRIGHT TIN-LEAD, UNDERPLATE 0.025 [.00100] MIN COPPER.
6. POSITIONS 2 & 7 ARE NOT COMMONED IN CABLE ASSEMBLY.

20M±0.15M [65.6FT±.50FT]	636136-3
25M±0.15M [82.02FT±.50FT]	636136-2
30M±0.15M [98.42FT±.50FT]	636136-1
A	PART NUMBER

DO NOT SCALE PRINT.
UNLESS SPECIFIED
DIMENSIONS IN mm [INCHES]
TOLERANCES ON :
2 PLC DEC ±0.13[.005]
3 PLC DEC ±0.51 [.020]
ANGLES ± -

MATERIAL
-

FINISH
4 5

DR 6-3-96 L. MORNINGSTAR
CHK 6-3-96 J. STARON
APPD 6-3-96 J. STARON
APPD 6-3-96 M. FOGG
PRODUCT SPEC -
APPLICATION SPEC -
WEIGHT -

AMP INCORPORATED
Harrisburg, Pa. 17105

NAME
CABLE ASSY, WITH EQUALIZER, HSSDC, 8 POSN

SIZE	FSCM NO	DRAWING NO
C	00779	636136
SCALE 2:1		SHEET 1 OF 2

636136

AMP 1471-6 REV 3-89

27-JUN-96 14:42:27 amp06193 /home/amp06193/edmmod

CUSTOMER DRAWING

DRAWING MADE IN THIRD ANGLE PROJECTION

THIS DRAWING IS UNPUBLISHED. RELEASED FOR PUBLICATION ,19 .

© COPYRIGHT 19 BY AMP INCORPORATED. ALL INTERNATIONAL RIGHTS RESERVED.

LOC	DIST
CF	39

REVISIONS				
ZONE	LTR	DESCRIPTION	DATE	APPD
	B	SEE SHT#1	6-27-95	JS

WIRING SCHEMATIC

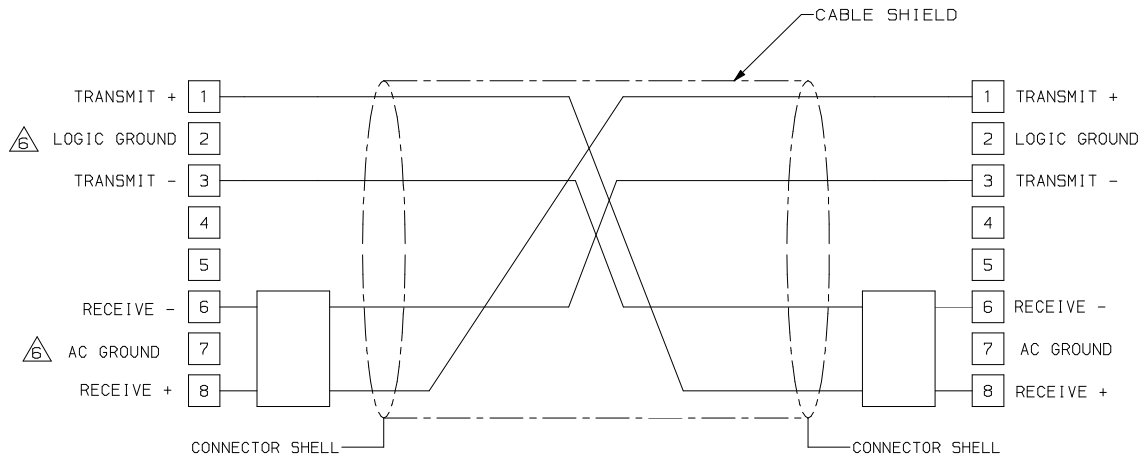

EQ: APPLICATION SPECIFIC EQUALIZER CIRCUITRY

636136

DO NOT SCALE PRINT. UNLESS SPECIFIED DIMENSIONS IN mm [INCHES] TOLERANCES ON : 2 PLC DEC ± - 3 PLC DEC ± 0.51[.020] ANGLES ± -	DR L. MORNINGSTAR 6-3-96	AMP INCORPORATED Harrisburg, Pa. 17105
	CHK J. STARON 6-3-96	
	APPD J. STARON 6-3-96	NAME CABLE ASSY, WITH EQUALIZER, HSSDC, 8 POSN
MATERIAL -	APPD M. FOGG 6-3-96	
	PRODUCT SPEC -	
FINISH -	APPLICATION SPEC -	SIZE C / FSCM NO 00779 / DRAWING NO 636136
	WEIGHT -	SCALE 2:1 / SHEET 2OF2

AMP 1471-6 REV 3-89

27-JUN-96 14:50:30 amp06193 /home/amp06193/edmmod

CUSTOMER DRAWING

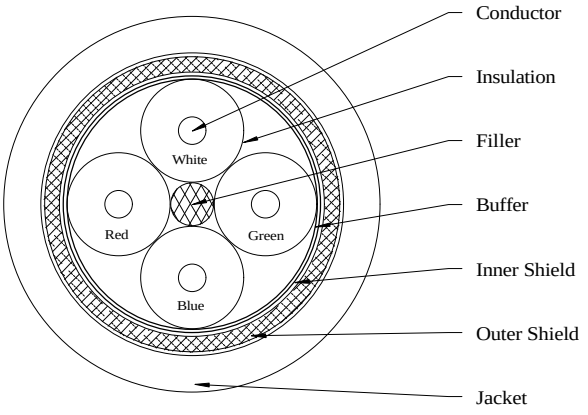

Construction

Singles

Conductor: 26 AWG 7/34 Tin Plated Copper, 0.019 Inch [0.48 mm] Diameter

Insulation: 0.0255 Inches [0.65 mm] of Polyolefin, 0.070 Inch [1.78 mm] Diameter

Final Assembly

Core: Solid Polyethylene Filler

Layer 1: 4 Singles (#1-4) Cabled Around Core

Buffer: Polyolefin Tape

Inner Shield: Aluminum/Polyester Tape, Alum Side Facing Out, 25% Overlap

Outer Shield: 36 AWG Tin Plated Copper Braid, 90% Coverage

Jacket: 0.025 Inches [0.64 mm] of PVC, Color - Black

Diameter: 0.265 ± 0.010 Inches [6.73 ± 0.25 mm]

Print Legend: "TYPE CL2 75°C 26 AWG (UL) OR AWM STYLE 20276 MADISON CABLE CORP. CSA TYPE CMH 60°C TurboQuad™"

Color Code

Pair #	Insulation Color/Tracer	Insulation Color/Tracer
1	Natural/White	Natural/Blue
2	Natural/Green	Natural/Red

Electrical Characteristics

Differential Impedance: 150 ± 7 Ohms @ TDR

Mutual Capacitance: 10 pF/ft [32.8 pF/m] Nominal

Near-End Crosstalk[1]: 1.0% Maximum

Attenuation[1]: 8.5 dB/24 meters Maximum(Output is a Minimum of 38% of Input)

Rise Time Degradation[1]: 400 ps Maximum Output Rise-Time

Time Delay: 1.50 ns/ft [4.92 ns/m] Nominal

Time Delay Skew Between Conductors of Same Pair: 200 ps/24 meters Maximum

Conductor DC Resistance: 0.044 Ohms/ft [0.14 Ohms/m] Maximum @ 20°C

[1] Differential Mode, 24 meter test length, 300 ps risetime (10%-90%), 941 ps pulse width.

Mechanical Performance

Flex Life: 100 cycles through 180° @ 2-½ Inch (64 mm) Maximum Bend Radius and 100 gram Load. Following this test, insulation and jacket should be free of cracks, and conductors free of opens or shorts.

Safety Certification

UL Listing: Type CL2 as specified in Article 725 of the National Electrical Code

UL Listing: AWM Style 20276 80°C 30 Volts VW-1

CSA Certification: Type CMH

********* CSA CMG APPROVAL PENDING *********

******** PATENT PENDING ********

MADISON Cable Corporation
An AMP Company

Specification Number: 13070

Part Number: 04PEC00001

Customer:

Customer #:

2 Pair 26 AWG 150 Ohm TurboQuad™ Fiber Channel Cable

Revision History			
3	03/11/97	JF	Revised electricals
4	04/23/97	JF	Revised electricals,print legend and description
5	05/01/97	JF	Revised description
6	06/03/97	JF	Revised electricals
7	10/09/98	KA	Revised Braid Coverage and Print Legend

Approvals		Initials	Date
Prepared By:	K. Arsenault	ka	10/9/98
Approved By:	B. Harvie	BH	10/9/98

125 Goddard Memorial Drive • Worcester, MA 01603 USA
Tel: (508) 752-2884 FAX: (508) 752-4230