PMC 1

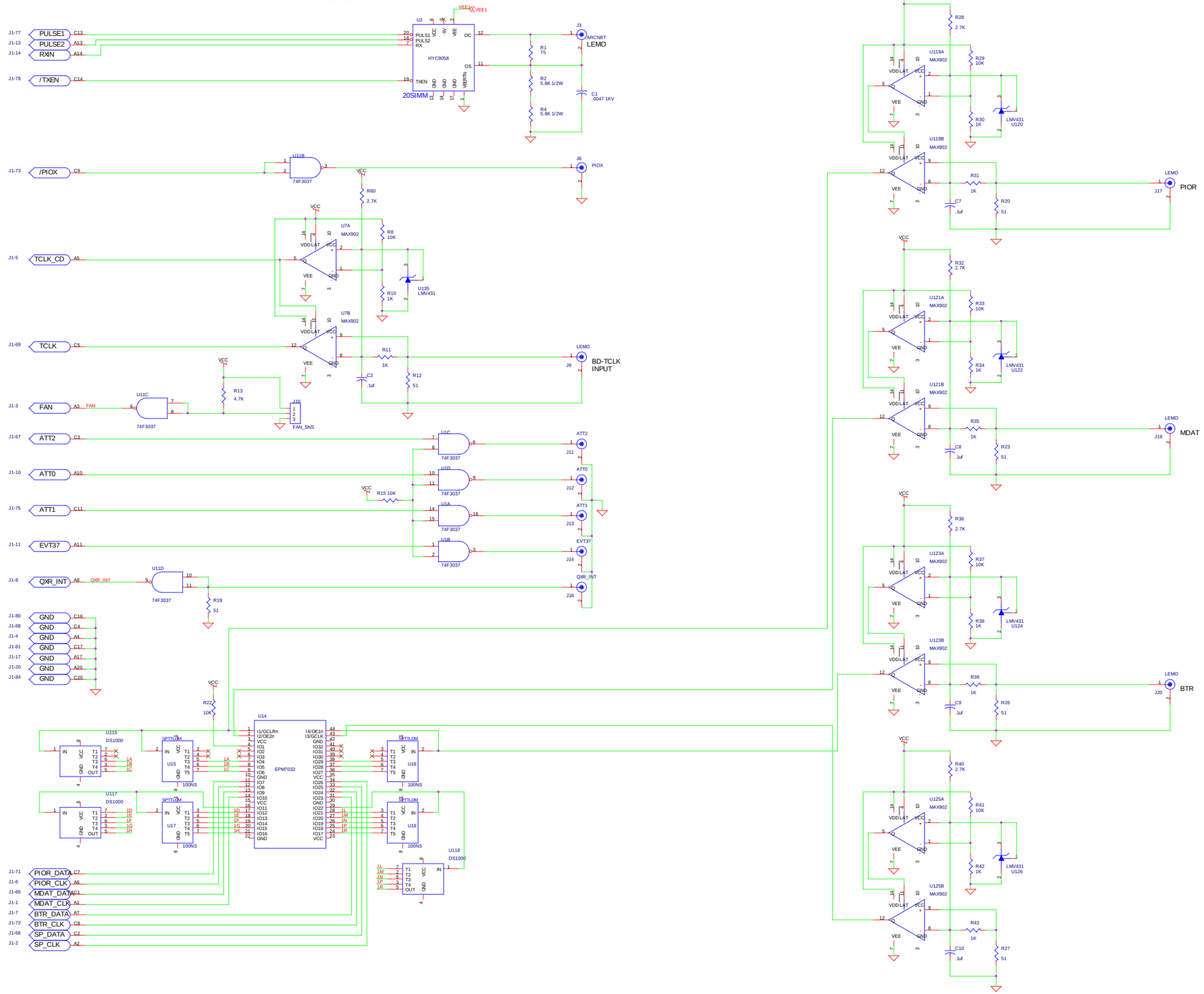

Fermilab
Beams Division / Controls Group

Title: NNSLD Transition Card for MVME2300

Size	Document Number	Originator	Rev
D	QXR_IO	P. Kasley	A

Date: Wednesday, January 19, 2000 Sheet 1 of 2

PMC 2

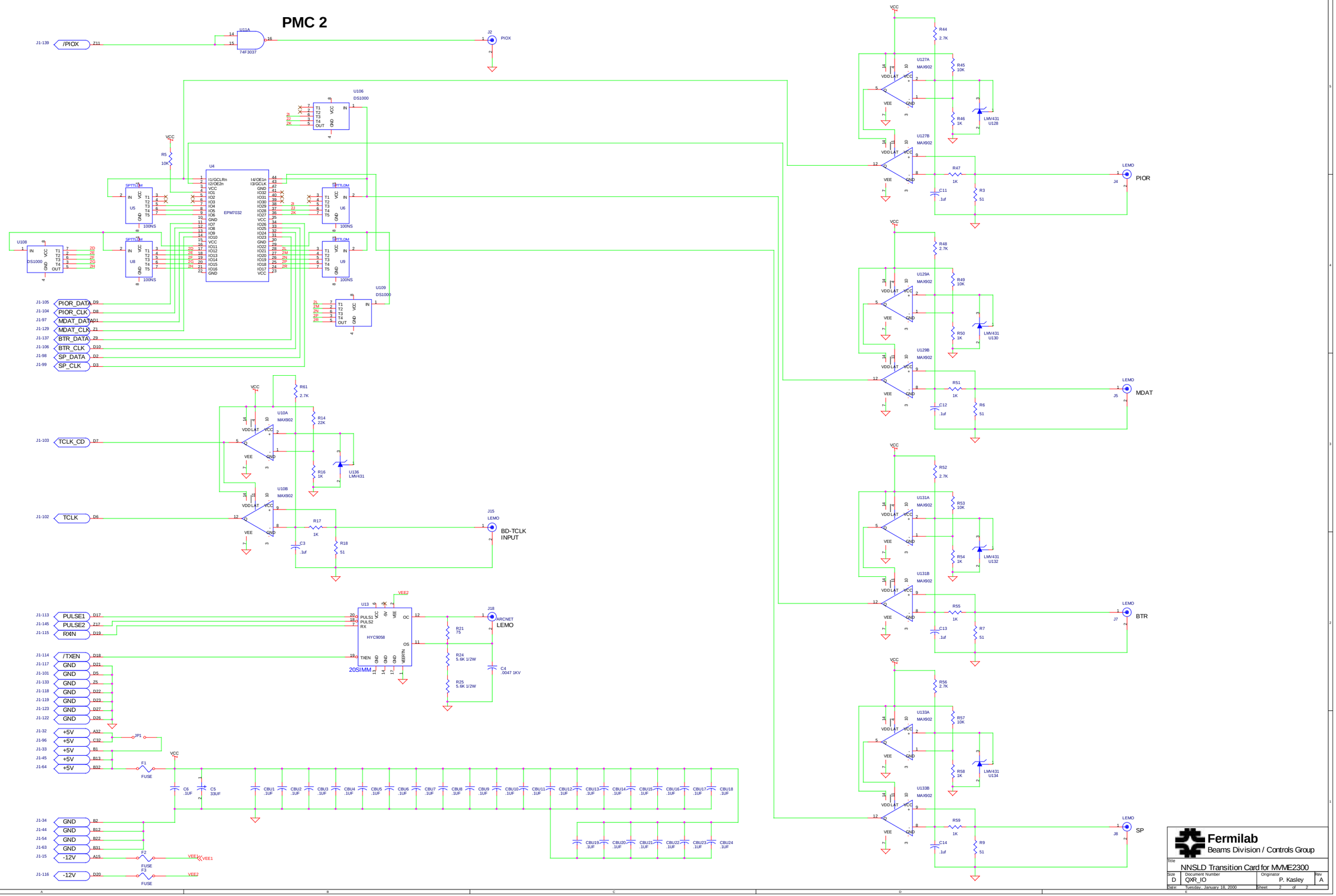
J1-139 /PIOX Z11
U11A 74F3037
J2 PIOX
U106 DS1000
U4 EPM7032
U5 SPTTLDM 100NS
U6 SPTTLDM 100NS
U8 SPTTLDM 100NS
U9 SPTTLDM 100NS
U108 DS1000
U109 DS1000
J1-105 PIOR_DATA D9
J1-104 PIOR_CLK D8
J1-97 MDAT_DATA D1
J1-129 MDAT_CLK Z1
J1-137 BTR_DATA Z9
J1-106 BTR_CLK D10
J1-98 SP_DATA D2
J1-99 SP_CLK D3
J1-103 TCLK_CD D7
J1-102 TCLK D6
U10A MAX902
U10B MAX902
U136 LMV431
J15 LEMO BD-TCLK INPUT
J1-113 PULSE1 D17
J1-145 PULSE2 Z17
J1-115 RXIN D19
J1-114 /TXEN D18
U13 HYC9058 20SIMM
J18 ARCNET LEMO
J1-32 +5V A32
J1-96 +5V C32
J1-33 +5V B1
J1-45 +5V B13
J1-64 +5V B32
JP1
E1 FUSE
J1-34 GND B2
J1-44 GND B12
J1-54 GND B22
J1-63 GND B31
J1-15 -12V A15
J1-116 -12V D20
F2 FUSE
F3 FUSE
VEE1
VEE2
U127A MAX902
U127B MAX902
U129A MAX902
U129B MAX902
U131A MAX902
U131B MAX902
U133A MAX902
U133B MAX902
U132 LMV431
U130 LMV431
U134 LMV431
LEMO J4 PIOR
LEMO J5 MDAT
LEMO J7 BTR
LEMO J8 SP
Fermilab
Beams Division / Controls Group
Title NNSLD Transition Card for MVME2300
Size D
Document Number QXR_IO
Originator P. Kasley
Rev A
Date: Tuesday, January 18, 2000
Sheet 2 of 2