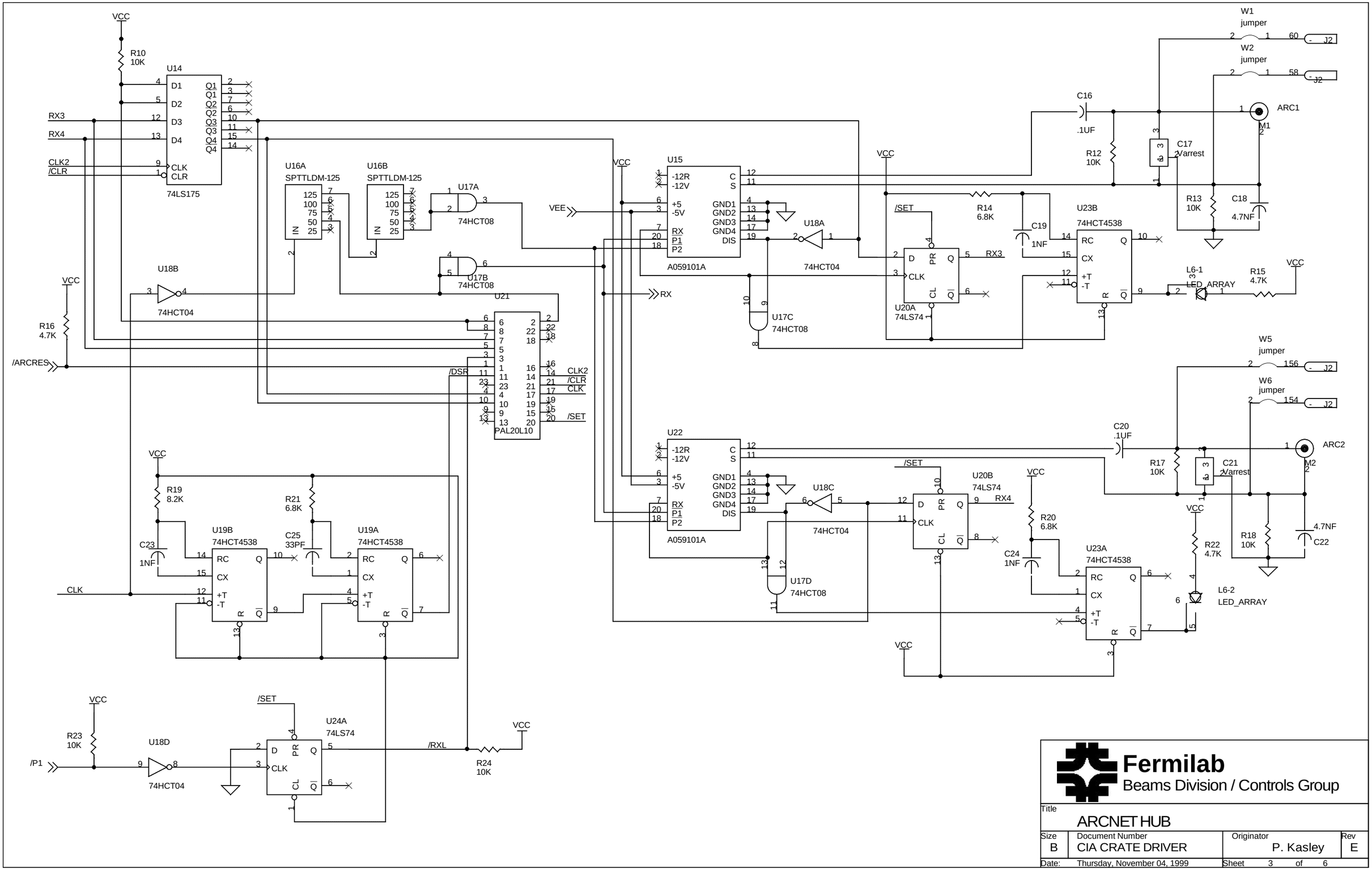

Fermilab
Beams Division / Controls Group

Title			
ARCNET HUB			
Size B	Document Number CIA CRATE DRIVER	Originator P. Kasley	Rev E
Date: Thursday, November 04, 1999		Sheet 3 of 6	

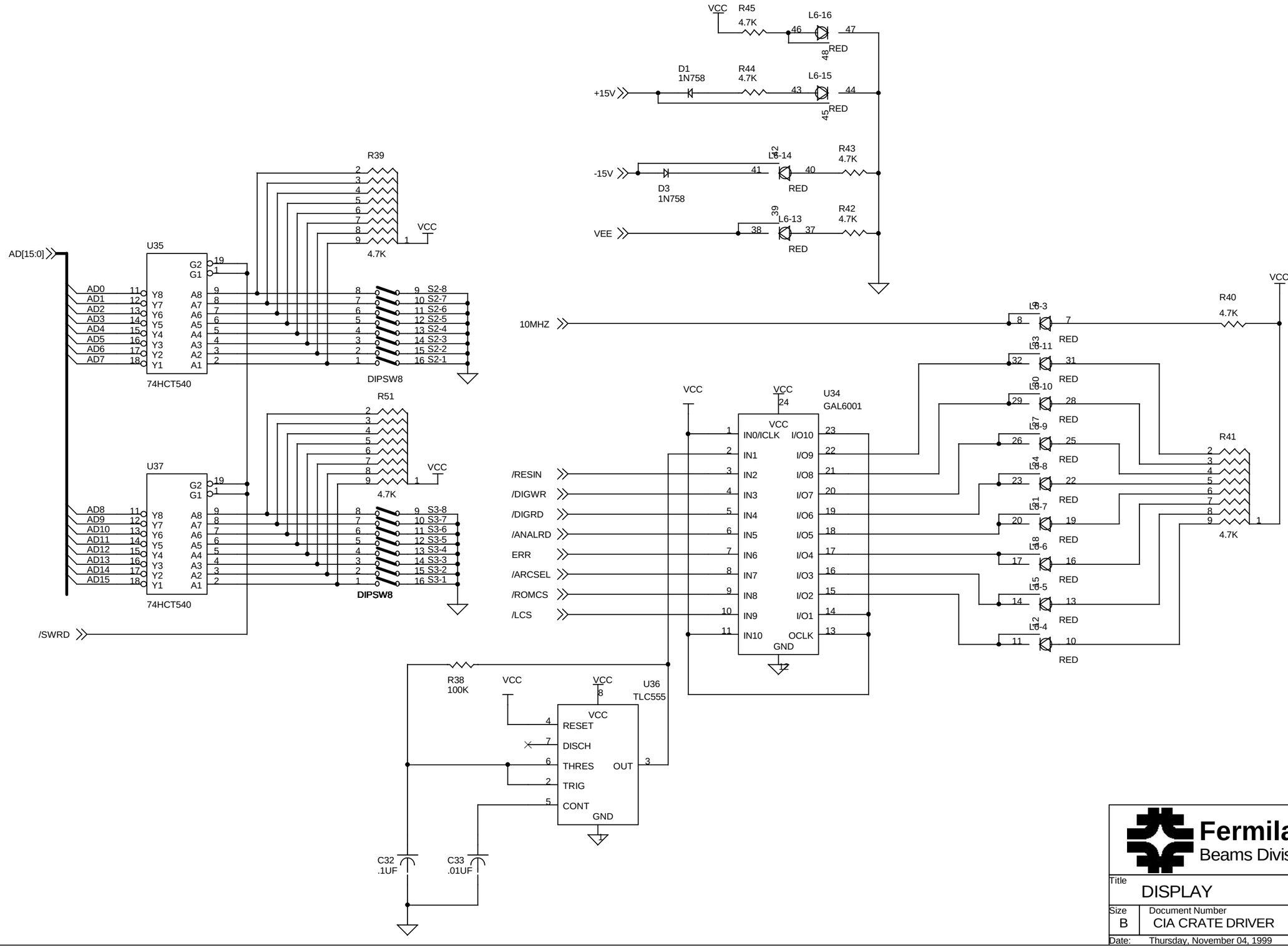

Fermilab
Beams Division / Controls Group

Title: DISPLAY			
Size: B	Document Number: CIA CRATE DRIVER	Originator: P. Kasley	Rev: E
Date: Thursday, November 04, 1999	Sheet 6 of 6		

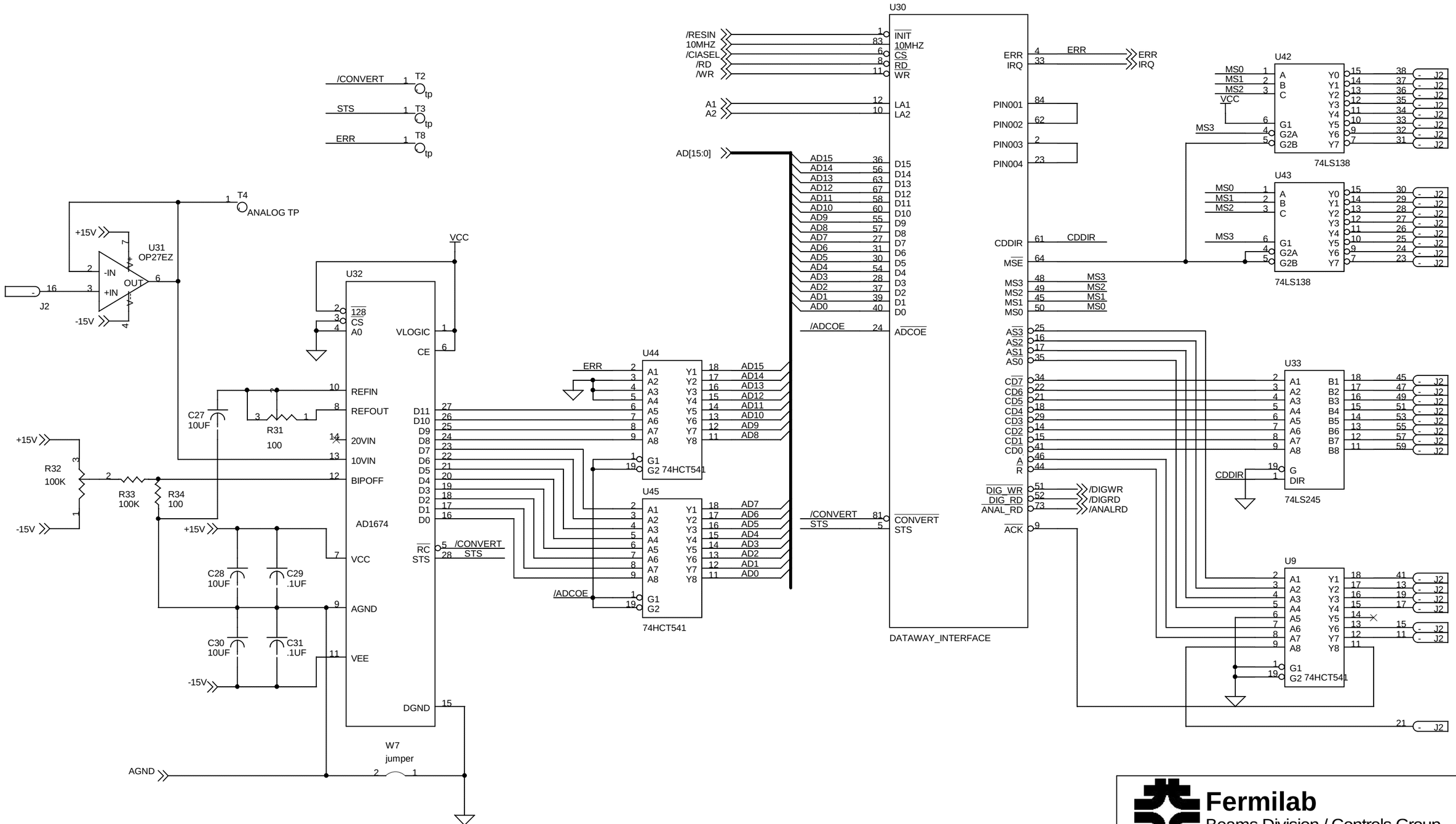

Fermilab
Beams Division / Controls Group

Title			
DATAWAY AND ADC			
Size B	Document Number CIA CRATE DRIVER	Originator P. Kasley	Rev E
Date: Thursday, November 04, 1999		Sheet 5 of 6	

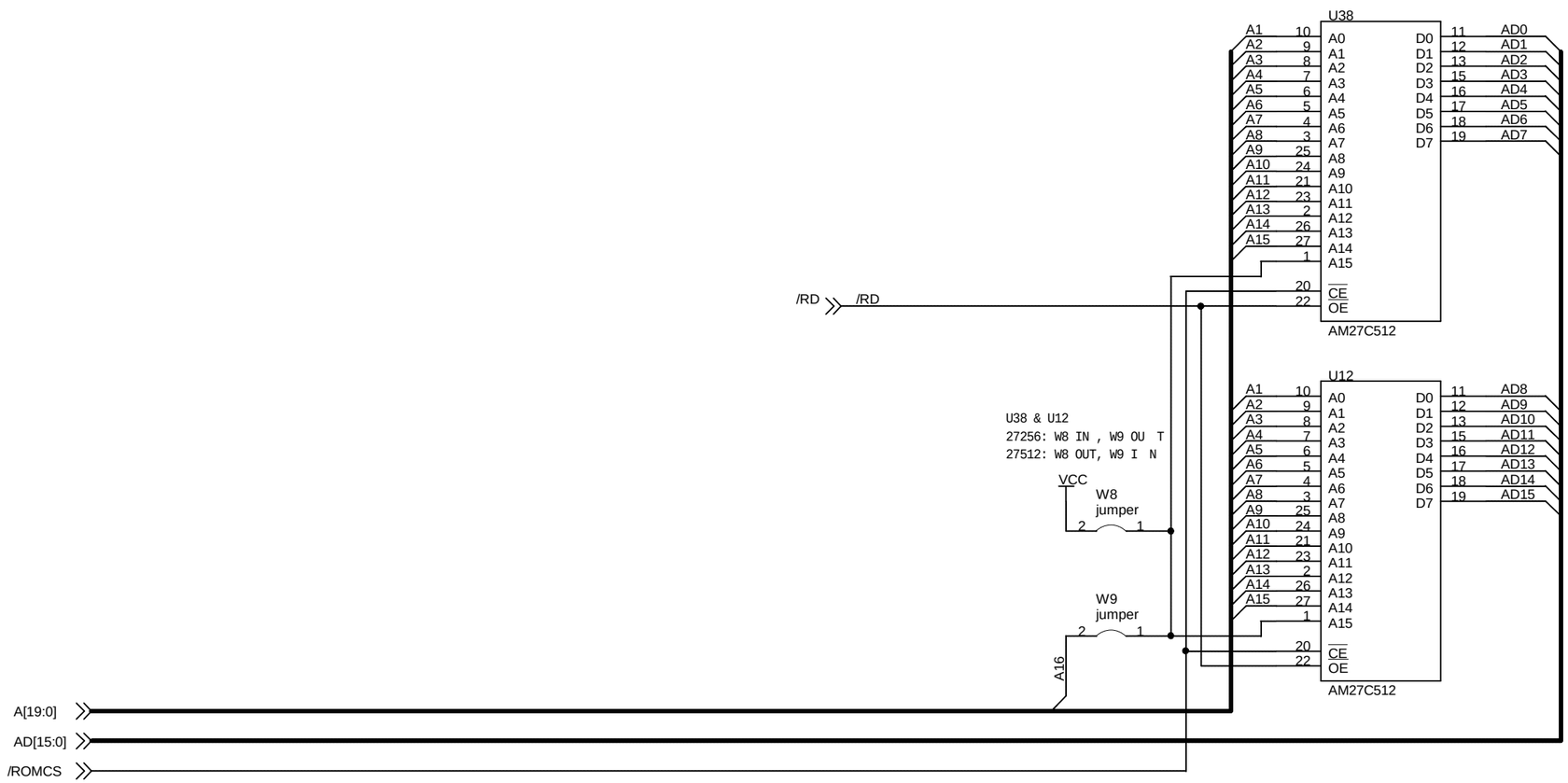

Fermilab
Beams Division / Controls Group

Title: ROM			
Size: B	Document Number: CIA CRATE DRIVER	Originator: P. Kasley	Rev: E
Date: Thursday, November 04, 1999		Sheet 4 of 6	

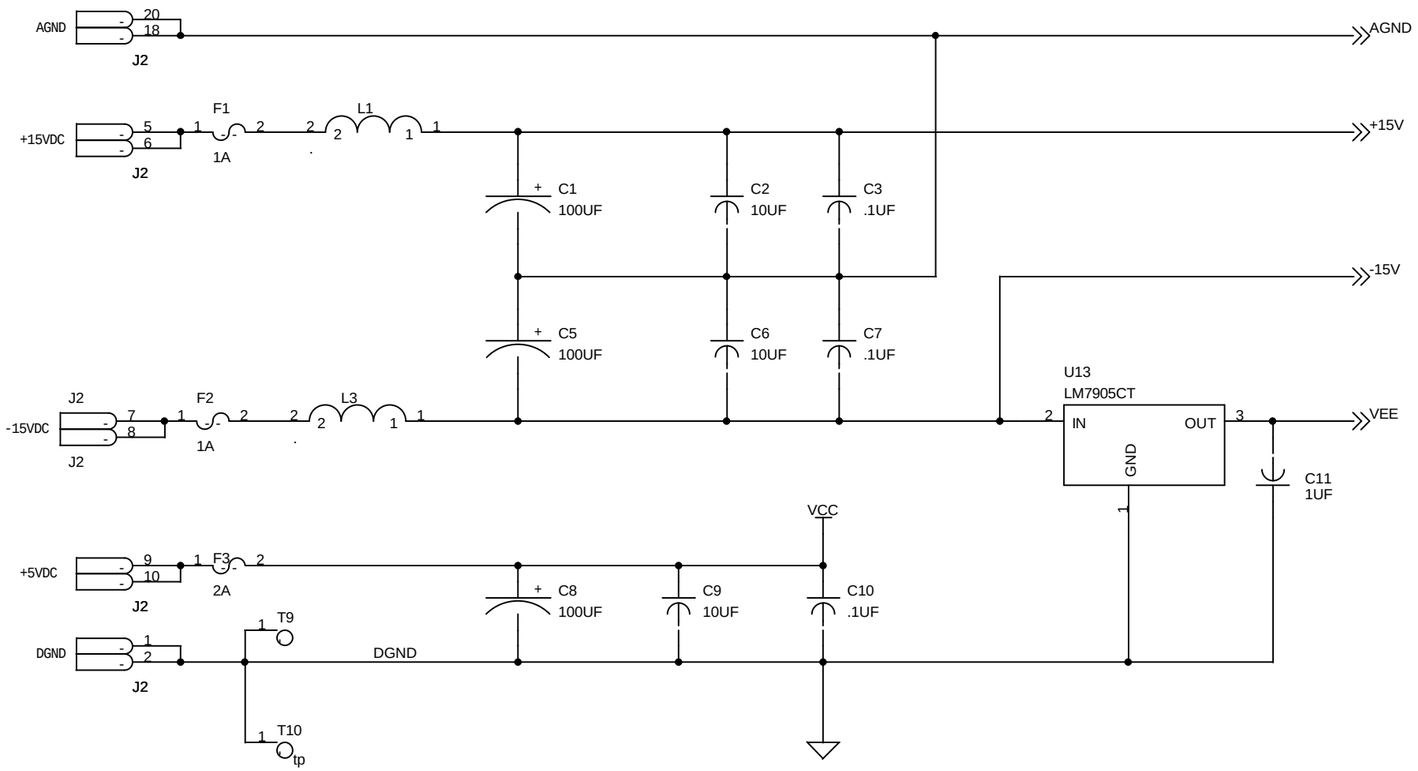

Fermilab
Beams Division / Controls Group

Title: POWER			
Size: B	Document Number: CIA CRATE DRIVER	Originator: P. Kasley	Rev: E
Date: Thursday, November 04, 1999		Sheet 2 of 6	

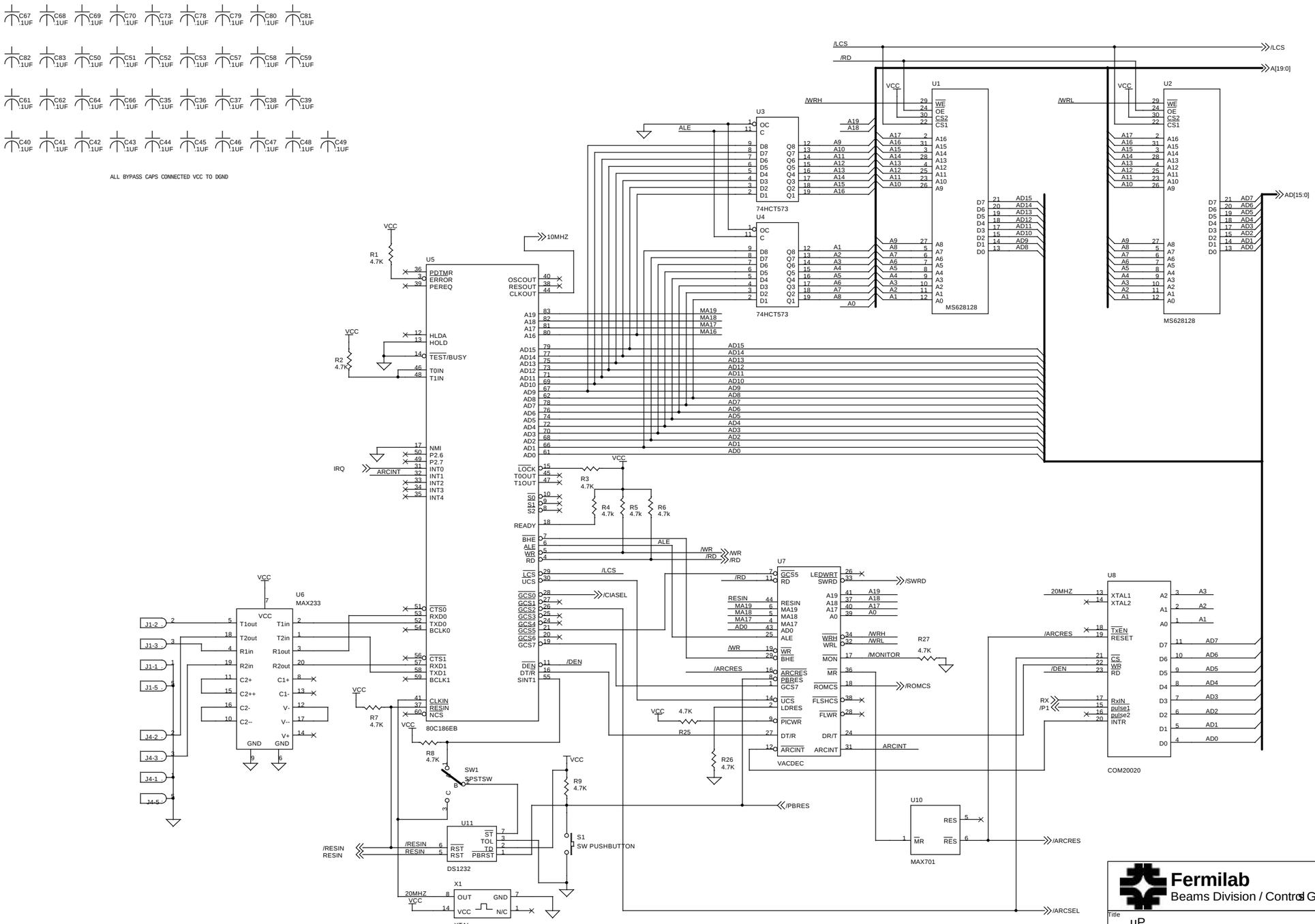
C67 .1UF
C68 .1UF
C69 .1UF
C70 .1UF
C73 .1UF
C78 .1UF
C79 .1UF
C80 .1UF
C81 .1UF
C82 .1UF
C83 .1UF
C50 .1UF
C51 .1UF
C52 .1UF
C53 .1UF
C57 .1UF
C58 .1UF
C59 .1UF
C61 .1UF
C62 .1UF
C64 .1UF
C66 .1UF
C35 .1UF
C36 .1UF
C37 .1UF
C38 .1UF
C39 .1UF
C40 .1UF
C41 .1UF
C42 .1UF
C43 .1UF
C44 .1UF
C45 .1UF
C46 .1UF
C47 .1UF
C48 .1UF
C49 .1UF
ALL BYPASS CAPS CONNECTED VCC TO DGND
/LCS
/RD
A[19:0]
/WRH
/WRL
U1
U2
U3
U4
74HCT573
MS628128
AD[15:0]
ALE
10MHZ
U5
80C186EB
OSCOUT
RESOUT
CLKOUT
PDTMR
ERROR
PEREQ
HLDA
HOLD
TEST/BUSY
T0IN
T1IN
NMI
P2.6
P2.7
INT0
INT1
INT2
INT3
INT4
IRQ
ARCINT
LOCK
T0OUT
T1OUT
READY
BHE
WR
RD
LCS
UCS
GCS0
GCS1
GCS2
GCS3
GCS4
GCS5
GCS6
GCS7
DEN
DT/R
SINT1
CTS0
RXD0
TXD0
BCLK0
CTS1
RXD1
TXD1
BCLK1
CLKIN
RESIN
NCS
/RESIN
/CIASEL
/DEN
/WR
/RD
/SWRD
/ROMCS
/PBRES
/ARCRES
/ARCSEL
U6
MAX233
U7
U8
COM20020
U10
MAX701
U11
DS1232
X1
XTAL
20MHZ
SW1
SPSTSW
S1
SW PUSHBUTTON
R1 4.7K
R2 4.7K
R3 4.7K
R4 4.7k
R5 4.7k
R6 4.7k
R7 4.7K
R8 4.7K
R9 4.7K
R25 4.7K
R26 4.7K
R27 4.7K
J1-2
J1-3
J1-1
J1-5
J4-2
J4-3
J4-1
J4-5
Fermilab
Beams Division / Controls Group
Title
uP
Size
C
Document Number
CIA CRATE DRIVER
Originator
P. Kasley
Rev
E
Date: Thursday, November 04, 1999
Sheet 1 of 6