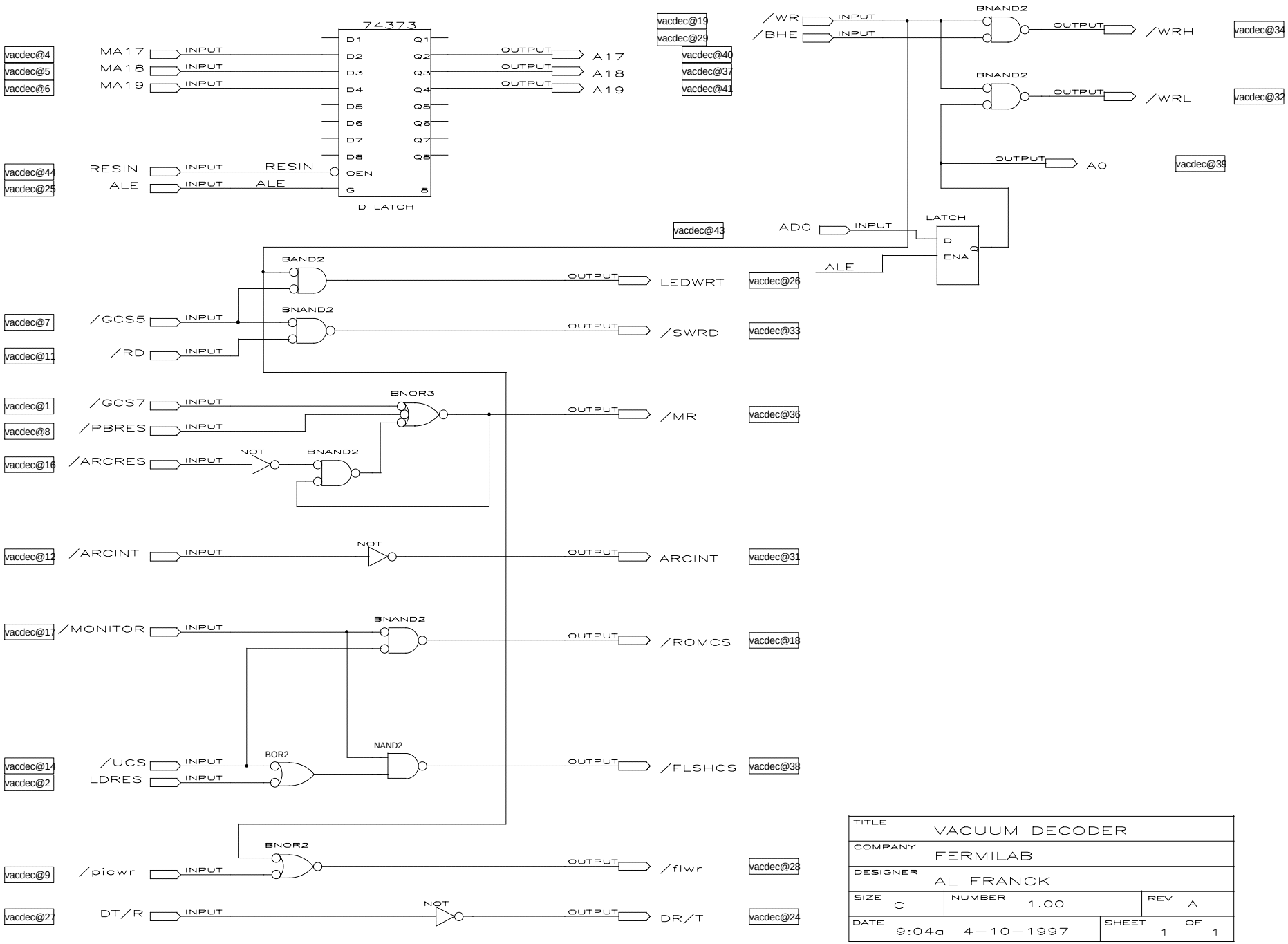

TITLE	VACUUM DECODER		
COMPANY	FERMILAB		
DESIGNER	AL FRANCK		
SIZE C	NUMBER 1.00		REV A
DATE 9:04a 4-10-1997		SHEET 1 OF 1	