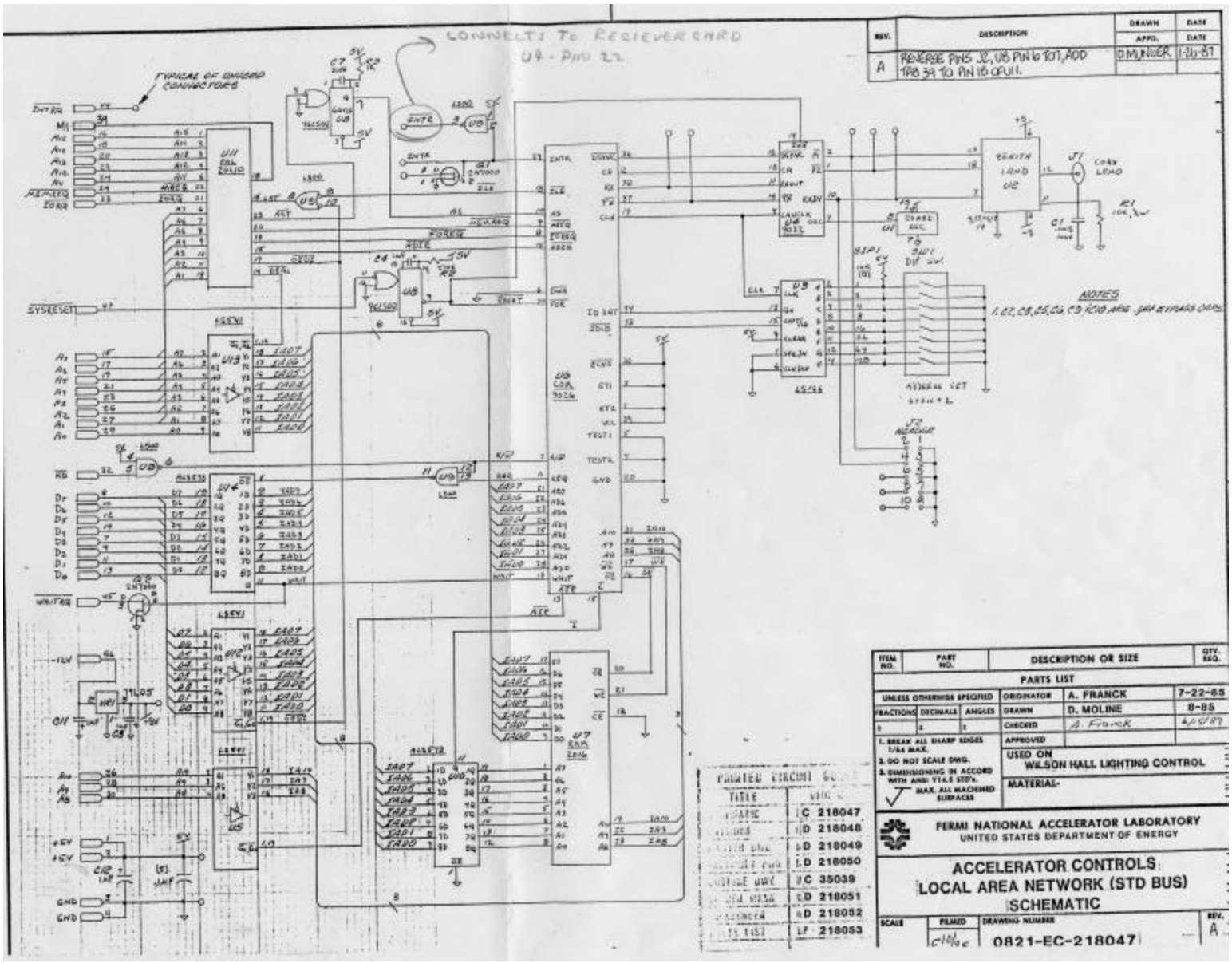
CONNECTS TO RECIEVER CARD
U4 - PIN 22
TYPICAL OF UNUSED CONNECTORS
NOTES
1. C2, C3, C5, C6, C9, C10 ARE 1/4 EVERGLADES CAPS
REV.
DESCRIPTION
DRAWN
APPD.
DATE
A
REVERSE PINS J2, U8 PIN 6 TO 7, ADD TAB 39 TO PIN 18 OF U11.
D MUNGER
1-26-87
ITEM NO.
PART NO.
DESCRIPTION OR SIZE
QTY. REQ.
PARTS LIST
UNLESS OTHERWISE SPECIFIED
FRACTIONS
DECIMALS
ANGLES
ORIGINATOR
A. FRANCK
7-22-85
DRAWN
D. MOLINE
8-85
CHECKED
A. Franck
APPROVED
1. BREAK ALL SHARP EDGES 1/64 MAX.
2. DO NOT SCALE DWG.
3. DIMENSIONING IN ACCORD WITH ANSI Y14.5 STD's.
MAX. ALL MACHINED SURFACES
USED ON
WILSON HALL LIGHTING CONTROL
MATERIAL-
FERMI NATIONAL ACCELERATOR LABORATORY
UNITED STATES DEPARTMENT OF ENERGY
ACCELERATOR CONTROLS
LOCAL AREA NETWORK (STD BUS)
SCHEMATIC
SCALE
FILMED
DRAWING NUMBER
0821-EC-218047
REV.
A
PRINTED CIRCUIT BOARD
TITLE
C 218047
D 218048
D 218049
D 218050
C 35039
D 218051
D 218052
F 218053