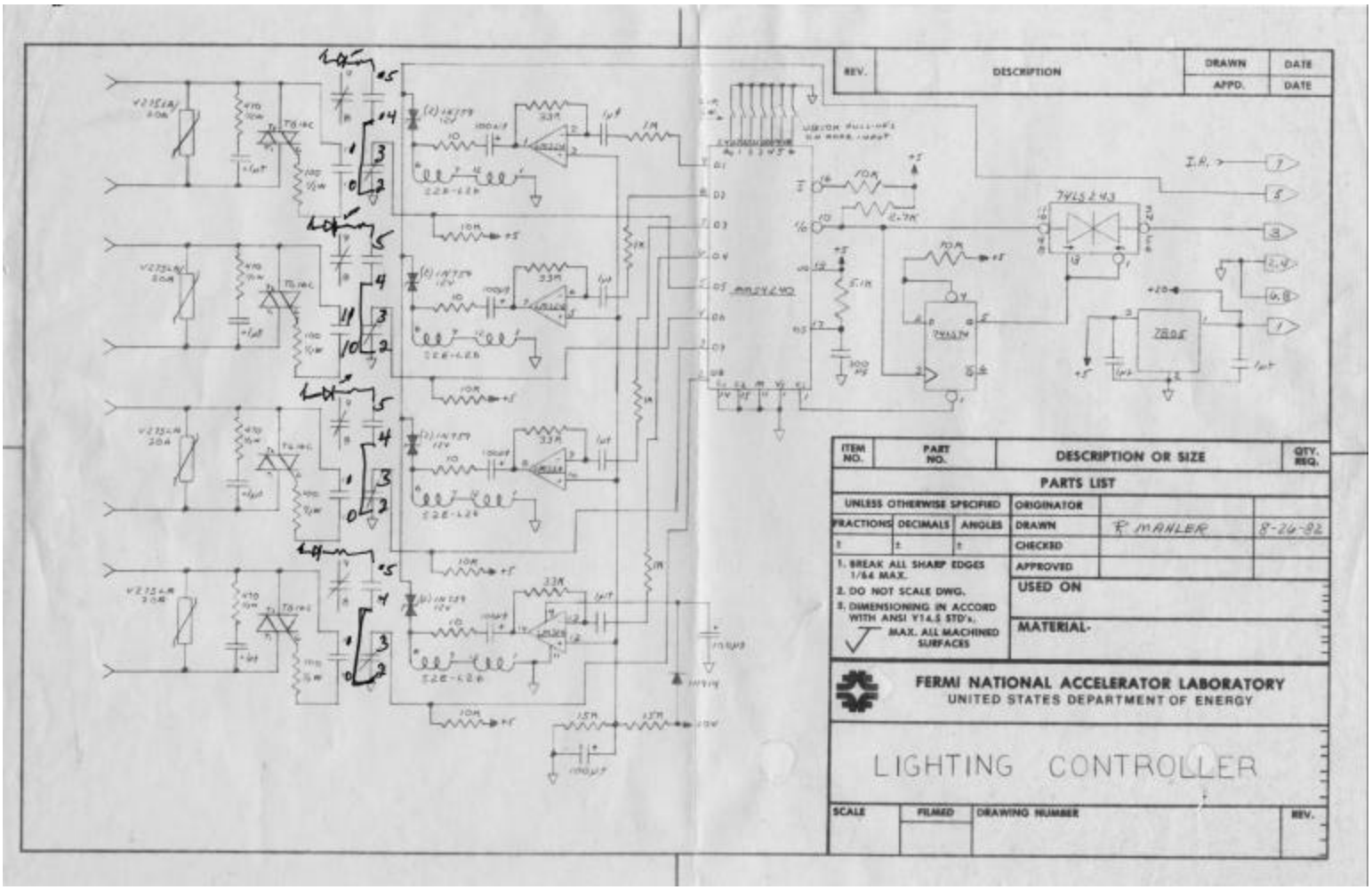
REV.
DESCRIPTION
DRAWN
DATE
APPD.
DATE
74LS243
7805
ITEM NO.
PART NO.
DESCRIPTION OR SIZE
QTY. REQ.
PARTS LIST
UNLESS OTHERWISE SPECIFIED
FRACTIONS
DECIMALS
ANGLES
ORIGINATOR
DRAWN
R MAHLER
8-26-82
CHECKED
APPROVED
1. BREAK ALL SHARP EDGES 1/64 MAX.
2. DO NOT SCALE DWG.
3. DIMENSIONING IN ACCORD WITH ANSI Y14.5 STD's.
MAX. ALL MACHINED SURFACES
USED ON
MATERIAL-
FERMI NATIONAL ACCELERATOR LABORATORY
UNITED STATES DEPARTMENT OF ENERGY
LIGHTING CONTROLLER
SCALE
FILMED
DRAWING NUMBER
REV.