A TRANSVERSE DAMPER SYSTEM FOR THE SPS IN THE ERA OF THE LHC

Dave McGinnis
July 13, 1995

Introduction

A bunch by bunch transverse damper system will be needed for the SPS when the SPS is used as an injector for the LHC. This paper will propose a stripline bunch by bunch damper system. An analysis of the gain, bandwidth, and power levels is included. Table 1 is a list of some of the relevant parameters for the damper system.

Number of batches		3
Spacing between batches		100 nS
Batch length		2 uS
Number of bunches per batch		80
Bunch spacing in a batch		25 nS
Bunch intensity (N_b)		1.6×10^{11}
Bunch length ($4\sigma_b$)		5 nS
Revolution frequency (f_r)		43 kHz
RF frequency		200 MHz
Energy (E)	Injection	26 GeV
	Extraction	450 GeV
Tune (Q)		26.6
Tune Spread (ΔQ)	Horizontal	1.0%
	Vertical	1.0%
Effective half aperture	Horizontal	40 mm
	Vertical	18 mm
Closed orbit drift		30% full aperture
Pickup Beta functions (β_{pu})		100 m
Pickup aperture (d_{pu})	Horizontal	.142 m
	Vertical	.038 m
Pickup sensitivity (g_k)		0.66
Kicker Beta functions (β_k)	Horizontal	76 m
	Vertical	45 m
Kicker aperture (d_k)	Horizontal	.142 m
	Vertical	.038 m
Kicker length (l_k)	Horizontal	1.500 m
	Vertical	1.500 m
Kicker Impedance (Z_o)		50 Ω
Kicker Voltage (V_k)		2000 V
Kicker sensitivity (g_k)		0.66

Table 1

Pickup Design

Presently a capacitive pickup is used as the damper pickup. The impedance of the pickup is about 1 Ω. A short distributed RC oscilloscope cable with a series impedance of 300

Ω directly connects the output of the pickup with a high impedance preamplifier. The bandwidth of the cable is about 200 MHz. The preamplifier has an input impedance of 1 MΩ and a gain of 26 dB. The voltage induced on the input to each preamp is approximately:

$$V(t)_{in} = \frac{1}{2} Z_o i_b(t) * f(t) \tag{1}$$

where * denotes the convolution operation, f(t) is the frequency response of the filter, and Z_o is the characteristic impedance of the pickup which is equal to:

$$Z_o = \frac{L}{cC} \tag{2}$$

where L is the length of the pickup, C is the capacitance of the pickup, and c is the velocity of light. The bunch current, $i_b(t)$ is convolved with the filter response of the RC cable. We will assume the bunch current to be a gaussian:

$$i_b(t) = \frac{qN_b}{\sqrt{2\pi}\sigma_b} e^{-\frac{t^2}{2\sigma_b^2}} \tag{3}$$

The Fourier transform of the bunch current is:

$$I_b(\omega) = qN_b e^{-\frac{\omega^2\sigma_b^2}{2}} \tag{4}$$

To make the math easier, we will assume that the filter has a gaussian response:

$$F(\omega) = e^{-\frac{1}{2}\left(\frac{\omega}{2\pi W_f}\right)^2} \tag{5}$$

where W_f is approximately the 3 dB bandwidth of the filter in Hertz. The inverse Fourier transform of the bunch current convolved with the filter is:

$$i_b(t) * f(t) = \frac{qN_b}{\sqrt{2\pi\left(\sigma_b^2 + \sigma_f^2\right)}} e^{-\frac{1}{2}\frac{t^2}{\left(\sigma_b^2 + \sigma_f^2\right)}} \tag{6}$$

where:

$$\sigma_f = \frac{1}{2\pi W_f} \tag{7}$$

If we use a bandwidth of 200 MHz, the current out of a pickup electrode has a peak value of 6.9 Amperes. If a bandwidth of half the bunch spacing is used (20 MHz), a peak current of 1.3 Amperes is achieved. Since the impedance of the pickup plates is about 1Ω, the input voltage to the preamp will exceed 1V. Therefore, the preamp will most likely saturate.

Closed Orbit Suppression

It may be possible to design the preamp to not have any gain but be used to solely to derive the sum and difference signals. If the closed orbit does not pass through the electrical center of the pickup, the current induced on one electrode plate will be different than the other plate resulting in a large unwanted difference signal. The closed orbit electrode currents may be balanced by placing variable capacitors (varactor diodes) in parallel with the electrodes. This has actually been done in the past but this feature has since been removed. However, this type of closed orbit suppression has the disadvantage that an active component with limited dynamic range is the first element in the amplifier chain and must bear the brunt of about half the beam current captured by the pickup.

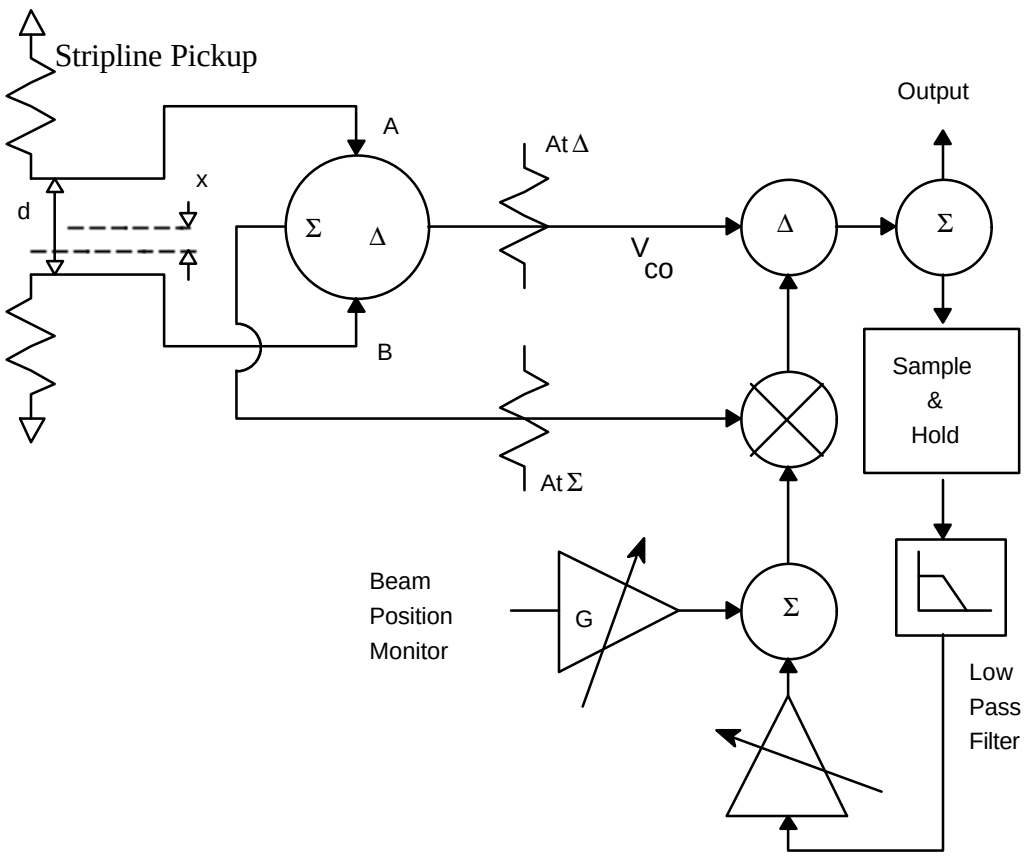

Figure 1. Sum Difference Closed Orbit Suppression.

Because of the limited dynamic range offered by the preamp of a capacitive pickup, we will now consider a stripline pickup configuration. Since a stripline pickup would probably not be able to detect the first betatron line for unbunched beam, we will assume that the damper is to be used only with the 40 MHz bunch structure provided by the PS. The sum and difference signals from the pickup are derived with a wideband RF sum and difference hybrid shown in Fig. 1. The difference signal carries the betatron information which is located at the betatron sidebands. Since the fractional part of the tune is rarely close to an integer, these sidebands are located far away from the revolution harmonics. If the beam does not pass through the center of the pickup, the difference signal also carries a large unwanted closed orbit signal located at the harmonics of the revolution frequency. The sum signal carries very little of the betatron information and is mostly composed of revolution harmonics of the beam current. These revolution harmonics should have the same spectrum as the revolution harmonics found in the

difference signal. If the sum signal is multiplied by a constant number and then is subtracted from the difference signal, the revolution lines in the difference signal can be suppressed without disturbing the betatron lines. The advantage of this system is that after the AtΔ attenuator, the first element in the amplifier chain is a passive difference hybrid which has a large dynamic range.

If the closed orbit moves slowly compared with the betatron frequency, then the closed orbit can be tracked through two separate legs. The first is a feedforward signal that is derived from a beam position signal. This beam position signal could be derived from the damper pickup or a pickup nearby. The other leg is a feedback signal which measures how much closed orbit signal is left in the difference signal and applies this error back to the sum mode multiplier. The feedforward signal is used so that the gain on the feedback leg can be reduced for noise or stability reasons.

In practice, closed orbit variations on the order of 5% of the half aperture have been reduced by well over 30dB. There is no reason why larger closed orbit variations cannot be suppressed except for the maximum output of the sum mode multiplier. For the Analog Device 834, a 0-500 MHz 4 quadrant multiplier, this maximum voltage into 50 Ω is about 0.3 V. However, an amplifier with a higher 1 dB compression point can be placed after the multiplier, but the frequency characteristics of the amplifier must be carefully matched in the difference leg with an equalizer. The major drawback to this type of closed orbit suppression is the wideband noise generated by the AD834. The spectral noise density measured out of the AD834 is about 147 dBm/Hz which is disastrous when used in a damper system for a storage machine such as the TEVATRON during collisions. However, the effect is not as bad if the damper is only to be used for a short time such as when the TEVATRON is injecting or accelerating.

Another pitfall of this closed orbit suppression scheme which was fairly difficult to track down is an apparent delay magnification effect for the difference mode signal compared to the sum mode signal due to mismatches in delay between the two legs of the pickup. The signal on the A and B sides of the pickup are:

$$I_A = \frac{I_b}{2}\left(1+\frac{2x}{d}\right)e^{j\omega\frac{\tau}{2}} \qquad I_B = \frac{I_b}{2}\left(1-\frac{2x}{d}\right)e^{-j\omega\frac{\tau}{2}} \tag{8}$$

where d is the pickup aperture, x is the closed orbit position with respect to the electrical center of the pickup, and τ is the delay difference between the **A** pickup cable and the **B** pickup cable. The sum and difference signals are:

$$I_{A+B} = I_b\left(\cos\left(\omega\frac{\tau}{2}\right)+j\frac{2x}{d}\sin\left(\omega\frac{\tau}{2}\right)\right) \tag{9}$$

$$I_{A-B} = I_b\left(\frac{2x}{d}\cos\left(\omega\frac{\tau}{2}\right)+j\sin\left(\omega\frac{\tau}{2}\right)\right) \tag{10}$$

For a very small delay error, the phase of the sum and difference signals is:

$$\theta_{A+B} \approx \omega\frac{x}{d}\tau \qquad \theta_{A-B} \approx \omega\frac{1}{4x/d}\tau \tag{11}$$

So the change in delay of the sum and difference signals is:

$$\text{Delay}_{A+B} = \frac{x}{d}\tau \qquad \text{Delay}_{A-B} = \frac{1}{4x/d}\tau \tag{12}$$

From Eqn. 12, the delay of the difference leg becomes "magnified" by the position of the closed orbit. This effect required the pickup cable delays to be matched within 10 pS.

Front End Pulse Shaping

The bunch spacing in the SPS will be 25 nS which is determined by the PS 40 MHz RF system. Therefore, the minimum bandwidth of a bunch by bunch dampers system should be 20 MHz. Using Eqn. 7, we see that the cut-off frequency for the beam spectrum is about 127 MHz so that it is unnecessary to design a pickup that can detect higher frequencies than this.

In this paper, we will assume that all possible bunch modes could be excited so that the worst possible case is for one bunch excitation. The frequency spectrum of a one bunch excitation covers every revolution line so that having the largest possible bandwidth will give the fastest damping rate. Another way to look at this, is that the damper signal applied to the kicker will be proportional to the beam current (if the signal is left unnormalized which is best for noise considerations). The amplitude of the pickup signal will be proportional to the bandwidth of the pickup for frequencies up to the bunch cut-off frequency of 127 MHz.

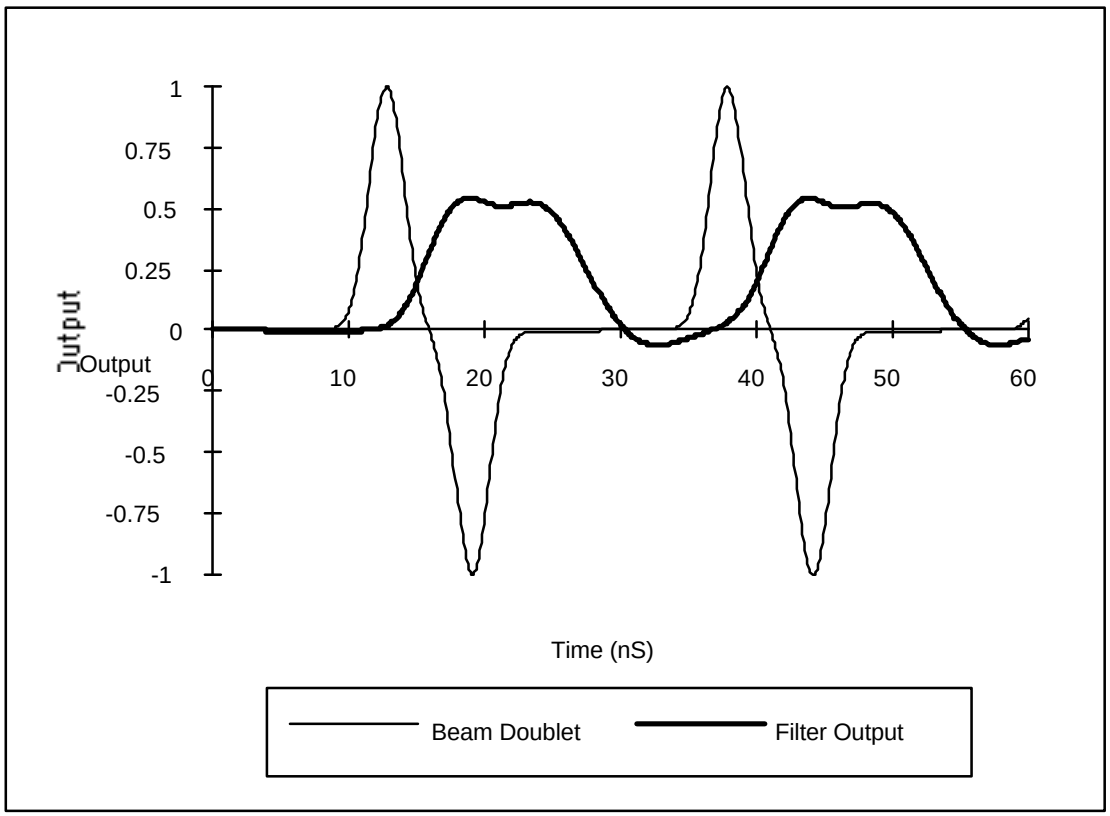

Figure 2. The stripline pickup signal for two bunches spaced 25 nS apart and the output of the 80 MHz low pass filter shown in Fig. 3.

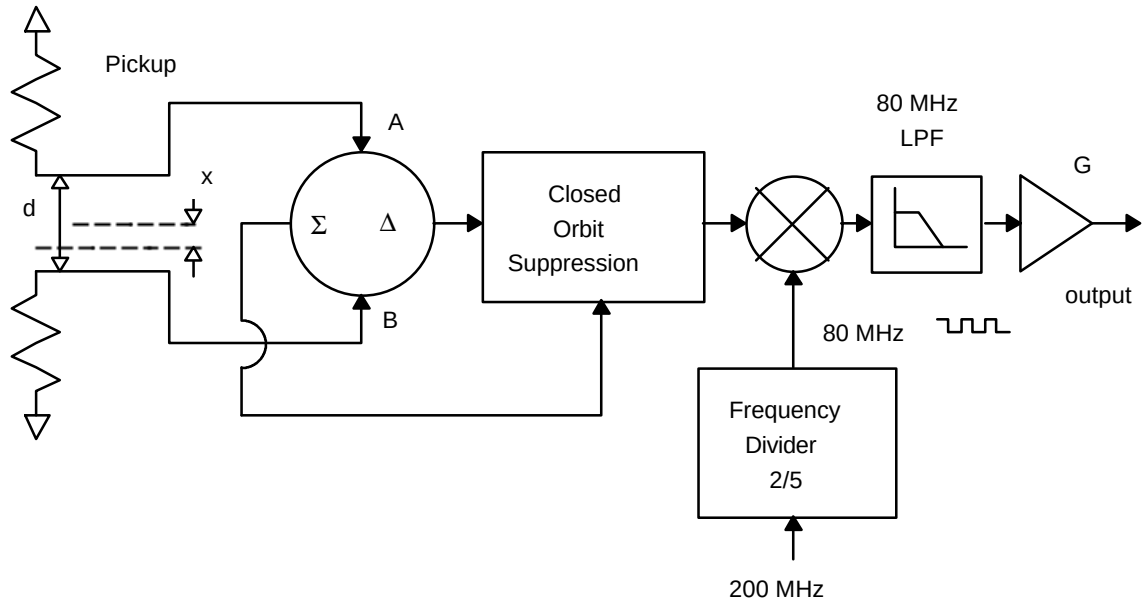

Figure 3. Front end pulse shaping.

The output of the stripline pickup will be a doublet as shown in Fig. 2. The overlap of the front and back pulses of the doublet should be small to avoid signal cancellation. Therefore, it is desirable for the center frequency of the stripline pickup to be well below the bunch cut-off frequency. The pickup signal should be processed in such a way so that the signal has a large flat top that minimizes the effect of phase noise in the digitizing clock or the beam. A reasonably square pulse can be obtained by multiplying the doublet with a square wave that is a harmonic of the bunch frequency as shown in Fig. 3. The zero crossing of the doublet and the square wave should coincide. The output of this pulse is then integrated by a low pass filter that has the bandwidth equal to the center frequency of the stripline pickup. A reasonable compromise is to build a pickup which has a length of 0.9375 m. The center frequency of the pickup is 80 MHz which is twice the bunch frequency. The output of the filter is shown in Fig. 2. The cut-off frequency of the filter is 80 MHz and the filter has 4 poles giving it a falloff of 24 dB/octave.

<u>Damper Back End</u>

Using the linear formula for the current induced on the pickup given in Eqn. 8, the voltage at the output of Fig. 3 is:

$$V_{A/D} = \frac{1}{\sqrt{2}} g_{pu} g_{cos} g_m g_{pulse} \frac{Z_o}{2} \left(\left(i_b\left(t + \frac{L_{pu}}{c}\right) + i_b\left(t - \frac{L_{pu}}{c}\right)\right) * f(t) \right)\Bigg|_{t=0} \frac{2x_{pu}}{d_{pu}} \qquad (13)$$

where g_{pu} is the pickup sensitivity (which is less than 1), L_{pu} is the length of the pickup, g_{cos} is the gain of the closed orbit suppression module, g_m is the conversion gain of the mixer, and g_{pulse} is the gain of the amplifier before the output. Theextra factor of 2 underneath Z_o is due to the fact that the pickup is a terminated stripline.

The rest of the damper system is shown in Fig. 4. It is assumed that the power amps with gain g_{pa} will be running Class B and that the total system will be push-pull. The deflection angle of the kicker is equal to the ratio of the transverse change in momentum to the longitudinal momentum:

$$\theta_k = 2g_k \frac{L_k}{d_k}\frac{q}{pc} = \frac{d\theta_k}{dV_k}V_k \tag{14}$$

where g_k is the sensitivity of the kicker, V_k is the kicker voltage, L_k is the length of the kicker, and d_k is the aperture of the kicker. To achieve the bandwidth of a bunch by bunch damper, the kicker should be a terminated stripline. The factor of 2 in Eqn. 14 is due to the magnetic field plus the electric field kick of a stripline.

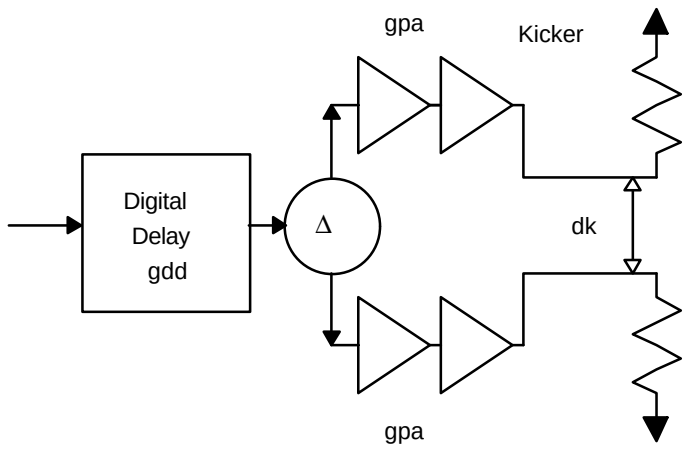

Figure 4. The back end of the Damper system.

Using Eqn. 13, the kicker deflection angle can be written as:

$$\theta_k = \frac{1}{\sqrt{2}} g_{pu} g_e \frac{Z_o}{2}\left(\left(i_b\left(t+\frac{L_{pu}}{c}\right)+i_b\left(t-\frac{L_{pu}}{c}\right)\right)*f(t)\right)\Bigg|_{t=0}\frac{d\theta_k}{dV_k}\frac{2x_{pu}}{d_{pu}} \tag{15}$$

where g_e is the electronic gain from the output of the pickup hybrid to the output of one of the kicker power amplifiers.

$$g_e = g_{cos} g_m g_{pulse} g_{pa} \tag{16}$$

where g_{pa} is the gain of the power amplifiers and includes the power amplifier difference hybrid. Equation 15 can be rewritten as:

$$\theta_k = \frac{2}{N_{turns}}\frac{x_{pu}}{\sqrt{\beta_k \beta_{pu}}} \tag{17}$$

The dimensionless quantity N_{turns} is defined as:

$$\frac{1}{g_e N_{turns}} = \frac{1}{\sqrt{2}} g_{pu} \frac{Z_o}{2}\left(\left(i_b\left(t+\frac{L_{pu}}{c}\right)+i_b\left(t-\frac{L_{pu}}{c}\right)\right)*f(t)\right)\Bigg|_{t=0}\frac{d\theta_k}{dV_k}\frac{\sqrt{\beta_{pu}\beta_k}}{d_{pu}} \tag{18}$$

Later, it will be shown that N_{turns} is equal to the damping time. The damping times can be calculated using Eqn. 18 and are shown in Table 2.

Plane	Energy (GeV)	$g_e N_{turns}$ (dB)
Vertical	26	76
Vertical	450	101
Horizontal	26	97
Horizontal	450	121

Table 2. Damping times assuming a front end pulse bandwidth of 80 MHz and a pickup length of 0.9375m

Damping Rates

The phase space betatron vector of a bunch can be separated into a slowly varying amplitude multiplied by a vector rotating at the betatron frequency.

$$A = a(t)e^{jQ\omega_r t} \tag{19}$$

The effect of the kicker on a bunch with betatron vector A in phase space is shown in Fig. 5. The new vector after going through the kicker is:

$$A(nT_r) = A((n-1)T_r)e^{j2\pi Q} + j\sqrt{\beta_k}\theta(nT_r) \tag{20}$$

The change in amplitude is:

$$\Delta a(nT_r) = je^{-j2\pi Qn}\sqrt{\beta_k}\,\theta(nT_r) \tag{21}$$

The kicker deflection is a function of the beam position at the pickup. From Eqn. 17:

$$\sqrt{\beta_k}\,\theta(t) = \frac{2}{N_{turns}}a(t)\cos\left(Q\omega_r t - \phi_{pk}\right) \tag{22}$$

Equation 21 becomes:

$$\Delta a(nT_r) = j\frac{a(nT_r)}{N_{turns}}\left(e^{-j\phi_{pk}} + e^{-j(4\pi Qn - \phi_{pk})}\right) \tag{23}$$

If the damping time is not very fast, then the second term on the right hand side of Eqn. 23 will average to zero over many turns. Setting the phase advance between pickup and kicker to be 90°, the average change per turn of the amplitude is:

$$\frac{da}{dt} = -\frac{1}{N_{turns}T_r}a \tag{24}$$

which has the solution:

$$a(t) = a_o e^{-\frac{t}{N_{turns}T_r}} \tag{25}$$

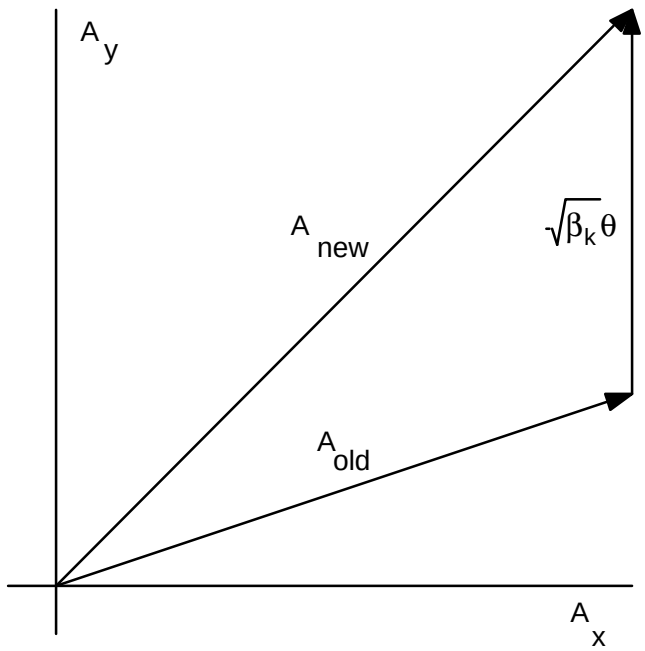

*Figure 5. The action of the kicker on a bunch with betatron amplitude **A** in phase space.*

Damper Simulation

A simple simulation can be made where the betatron amplitude can be calculated from the preceding betatron amplitude using:

$$A_{n+1} = e^{j2\pi Q}\left(A_n - \frac{2}{N_{turns}}\mathrm{Re}\{A_n\}\right) \tag{26}$$

where it has been assumed that the phase advance between pickup to kicker is an odd multiple of 90°. Figure 6 shows a simulation where the damping time was set to 10 turns. The fastest damping possible is 4 turns. Larger damper gains will have the damper over-correcting each turn. If the damper overcorrects, then the betatron amplitude will grow instead of decreasing. Therefore the maximum electronic gain for the damper should be 12 dB less than what is found in Table 2.

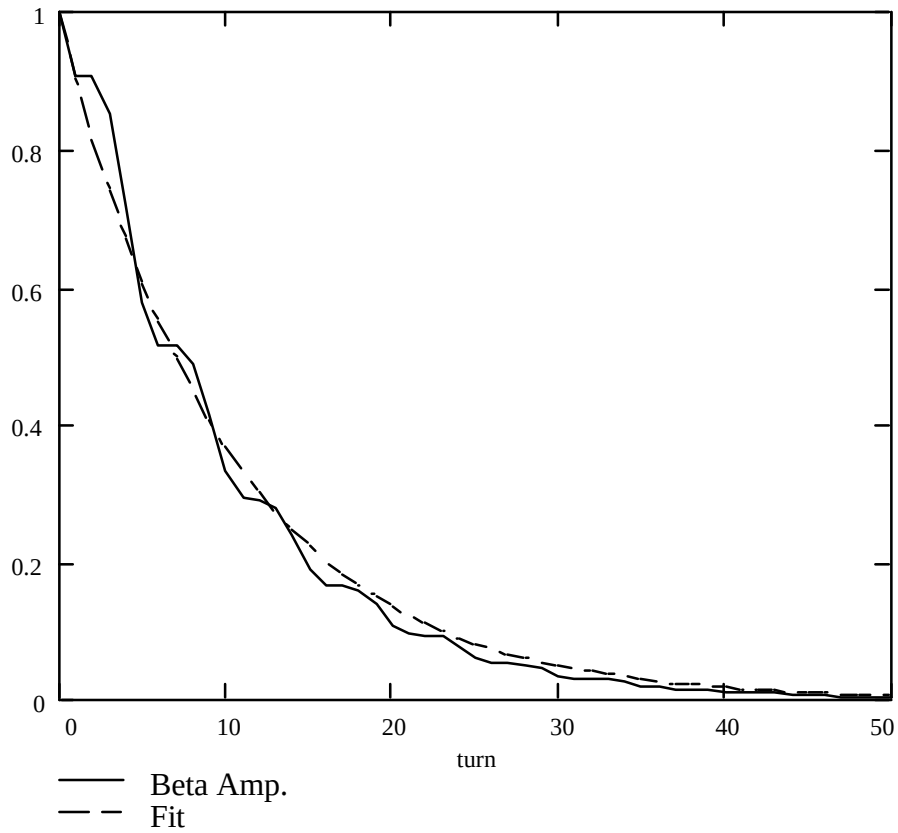

Figure 6. Normalized betatron amplitude for a damper with a damping time of 10 turns.

Non-Linear Damping

In the simulation shown in Figure 6 it was assumed that the damper power amplifier did not saturate. This is typically not true at injection where injection errors due to kickers, magnet drift, etc. result in a large initial betatron oscillation. If the damper saturates, the damping will become non-linear and the damping rate will depend on the initial amplitude of the betatron oscillation. The initial amplitude of the betatron oscillation is:

$$a_{inj} = \frac{x_{inj}}{\sqrt{\beta_{inj}}} \tag{27}$$

The amount of betatron amplitude that the kicker can remove each turn is limited by the maximum voltage on the kicker. The kicker waveform now looks like a square wave with amplitude θ_{max} oscillating at the betatron frequency: The square wave can be expanded in a Fourier series:

$$\theta(t) = \frac{4}{\pi}\frac{d\theta_k}{dV_k} V_{k_{max}} \sum_{m=1}^{\infty} \frac{(-1)^{m+1}}{2m-1} \cos\left((2m-1)Q\omega_r t - \phi_{pk}\right) \tag{28}$$

where V_{kmax} is the maximum kicker voltage. Following the same procedure that was used in Eqn. 23, the only term that will not average to zero is the m=1 term. The average change in amplitude for one turn is:

$$\Delta a = -\frac{2}{\pi}\sqrt{\beta_k}\,\frac{d\theta_k}{dV_k}V_{k_{max}} \tag{29}$$

Equation 24 now becomes:

$$\frac{da}{dt} = -\frac{2}{\pi T_r}\sqrt{\beta_k}\,\frac{d\theta_k}{dV_k}V_{k_{max}} \tag{30}$$

which has the solution:

$$a(t) = \frac{x_{inj}}{\sqrt{\beta_{inj}}}\left(1 - \frac{t}{N_{sat.}T_r}\right) \tag{31}$$

The damping time is:

$$N_{sat.} = \frac{\pi}{2}\frac{x_{inj}}{\sqrt{\beta_{inj}\beta_k}}\frac{1}{\frac{d\theta_k}{dV_k}V_{k_{max}}} \tag{32}$$

The injection oscillation should be damped before the bunch has a chance to decohere. The decoherence time due tune spread is:

$$T_{decoh} = \frac{T_{rev}}{\pi\Delta Q} = N_{dc}T_{rev} \tag{33}$$

Using the numbers for space charge tune spread at injection that were seen in the SPS during collider running (and is given in Table 1), the decoherence time is 32 turns. If the saturated damping time is set equal to the decoherence time, the maximum amplitude of oscillation at the pickup at injection is 1.9 mm horizontally and 5.5 mm vertically. A simulation of the vertical SPS damper using the parameters of Table 1 and using a linear damping gain of 4 turns is shown in Figures 7 and 8.

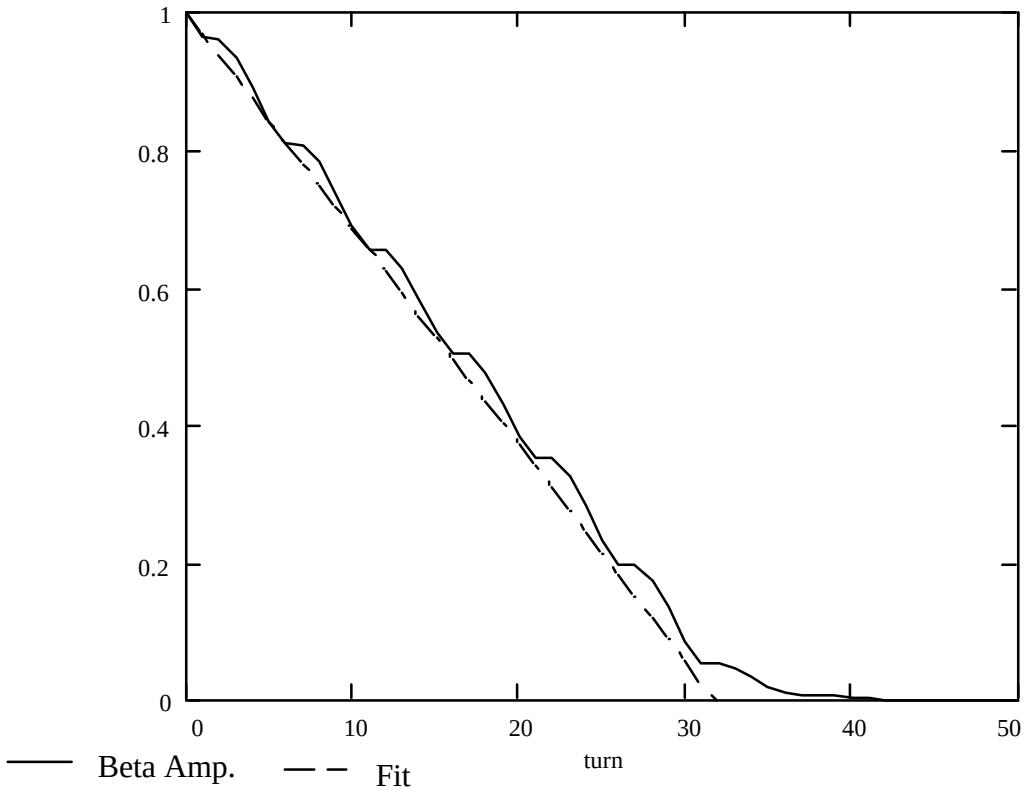

Figure 7. Normalized betatron amplitude for the vertical damper at injection. The linear damper gain is set for 4 turns. The injection amplitude at the pickup is 5.5 mm..

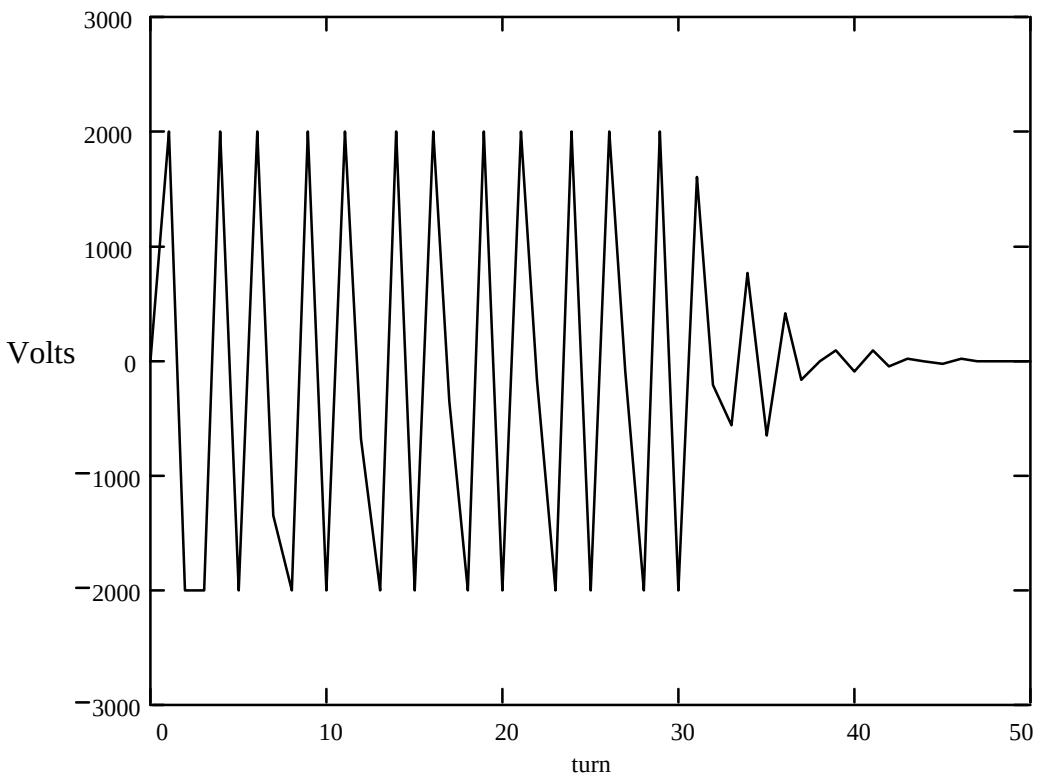

Figure 8. Kicker voltage for the vertical damper at injection. The linear damper gain is set for 4 turns. The injection amplitude at the pickup is 2.75 mm..

Kicker Bandwidth

The previous analysis assumed that the damper was bunch by bunch so that each bunch had no knowledge of the any other bunch. This was done by making the bandwidth of the damper much larger than 1/bunch spacing. For the pickup, this is fairly easy to do and also increases the sensitivity of the pickup. (See Eqn. 13) A wideband power amplifier for the kicker is much more difficult. This section will address what is the minimum possible bandwidth that is needed for the kicker power amp.

Since we are talking about bandwidth, then this analysis will be done in the frequency domain. To do the analysis in the frequency domain requires the formulation of coupled bunch modes. Coupled bunch mode formulation assumes that the bunches are equally spaced and uniformly populated. Even though this will not be the case for the SPS bunch train configuration, the coupled bunch mode analysis for high mode numbers will sort of be a worst case description for the situation where the betatron phase alternates by 180° every bunch.

The slowly varying betatron amplitude (see Eqn. 19) for each bunch **i** is:

$$a_i(t) = \sum_{m=0}^{h} b_m(t) e^{j2\pi mi/h} \tag{34}$$

where h is the number of bunches in the machine. The betatron vector at the kicker is:

$$A_k(t) = \sum_{m=0}^{h} b_m(t) e^{j(m+Q)\omega_r t} \tag{35}$$

At the pickup, the betatron phase is rotated by $-\phi_{pk}$ for each bunch. The pickup signal before the going through the power amplifier will be:

$$\frac{j}{g_{pa}} \sqrt{\beta_k}\,\theta(t) = j \frac{2}{g_{pa} N_{turns}} \mathrm{Re}\left(\sum_{m=0}^{h} b_m e^{j(m+Q)\omega_r t - j\phi_{pk}} \right) \tag{36}$$

where g_{pa} is the gain of the power amplifier.

For a bunch by bunch damper, this signal will be delayed by **x** turns and then be passed through a **y** turn notch filter. The x turn delay multiplies the coupled bunch mode amplitude by:

$$e^{-j(m+Q)\omega_r x T_r} \tag{37}$$

The notch filter multiplies the coupled bunch mode amplitude by:

$$\frac{1}{2}\left(1 - e^{-j(m+Q)\omega_r y T_r}\right) \tag{38}$$

Equation 36 becomes:

$$\frac{j}{g_{pa}}\sqrt{\beta_k}\theta(t) = j\frac{2\sin(\pi Qy)}{g_{pa}N_{turns}}\mathrm{Re}\left(\sum_{m=0}^{h} b_m e^{j(m+Q)\omega_r t - j\psi}\right) \tag{39}$$

where:

$$\psi = \phi_{pk} + \pi Q(2x+y) - \frac{\pi}{2} \tag{40}$$

Because of the non-linear nature of the digitizer, the gain of the power amplifier in Eqn. 39 has to be specified carefully. For a single clock event, The output of the digitizer is going to be a function of time $v_D(t)$. In general, the output of the digitizer could be further processed by other non-linear operations such as frequency up-converting by multiplying with a mixer. In our case $v_D(t)$ will be a square pulse which has a length equal to the bunch spacing. The power amplifier has an impulse response:

$$G_{pa}r_{pa}(t) = \frac{G_{pa}}{2\pi}\int_{-\infty}^{\infty} R_{pa}(\omega)e^{j\omega t}d\omega \tag{41}$$

where G_{pa} is the maximum gain of the amplifier in the frequency domain (i.e. the maximum value of R_{pa} is unity). The response of the kicker will be:

$$r_k(t) = \frac{1}{2\pi}\int_{-\infty}^{\infty} R_k(\omega)e^{j\omega t}d\omega \tag{42}$$

where the maximum value of R_k is one. The gain of the power amplifier is defined as:

$$g_{pa}(t) = \frac{G_{max}r_k(t) * \left(r_{pa}(t) * v_D(t)\right)}{v_D(0)} \tag{43}$$

where * denotes the convolution operation. This can be re-written as:

$$g_{pa}(t) = G_{pa}\frac{\int_{-\infty}^{\infty} R_k(\omega)R_{pa}(\omega)V_D(\omega)e^{j\omega t}d\omega}{\int_{-\infty}^{\infty} V_D(\omega)d\omega} = \frac{1}{2\pi}\int_{-\infty}^{\infty}\tilde{g}_{pa}(\omega)e^{j\omega t}d\omega \tag{44}$$

We will assume that the delay of the $g_{pa}(t)$ is zero. **This means that the group delay of the terms $R_k(\omega)$, $R_{pa}(\omega)$, $V_D(\omega)$ is zero.** Then Eqn. 39 should be written as:

$$\frac{j}{g_{pa}(0)}\sqrt{\beta_k}\theta(t) = j\frac{2\sin(\pi Qy)}{g_{pa}(0)N_{turns}}\mathrm{Re}\left(\sum_{m=0}^{h} b_m e^{j(m+Q)\omega_r t - j\psi}\right) \tag{45}$$

Since the power amplifier might not have enough bandwidth so that the signal of the previous bunches has not died away when the new signal arrives at the power amplifier, we must sum over the amplitudes of the previous bunches.

$$j\sqrt{\beta_k}\,\theta(t) = j\frac{2\sin(\pi Q y)}{g_{pa}(0)N_{turns}}\sum_{l=-\infty}^{\infty} g_{pa}\left(l\frac{T_r}{h}\right)\mathrm{Re}\left(\sum_{m=0}^{h} b_m e^{j(m+Q)\omega_r\left(t-l\frac{T_r}{h}\right)-j\psi}\right) \tag{46}$$

The change in amplitude of bunch i is:

$$A\left(\left(n+\frac{i}{h}\right)T_r\right) = A\left(\left(n+\frac{i}{h}-1\right)T_r\right)e^{j2\pi Q} + j\sqrt{\beta_k}\,\theta\left(\left(n+\frac{i}{h}\right)T_r\right) \tag{47}$$

which reduces to:

$$\sum_{m=0}^{h}\Delta b_m e^{j2\pi mi/h} = j\sqrt{\beta_k}\,\theta\left(\left(n+\frac{i}{h}\right)T_r\right)e^{-j2\pi\left(n+\frac{i}{h}\right)Q} \tag{48}$$

Substituting Eqn. 46 into Eqn. 48 and then averaging over the number of turns n (just as in Eqn. 23) results in:

$$\sum_{m=0}^{h}\Delta b_m e^{j2\pi mi/h} = j\frac{e^{-j\psi}\sin(\pi Q y)}{g_{pa}(0)N_{turns}}\sum_{m=0}^{h} b_m e^{j2\pi mi/h}\sum_{l=-\infty}^{\infty} g_{pa}\left(l\frac{T_r}{h}\right)e^{-j2\pi(m+Q)\frac{l}{h}} \tag{49}$$

The second sum in Eqn. 49 can be written as:

$$\sum_{l=-\infty}^{\infty} g_{pa}\left(l\frac{T_r}{h}\right)e^{-j2\pi(m+Q)\frac{l}{h}} = \int_{-\infty}^{\infty} g_{pa}(t)e^{-j(m+Q)\omega_r t}\left(\sum_{l=-\infty}^{\infty}\delta\left(t-l\frac{T_r}{h}\right)\right)dt \tag{50}$$

The sum of delta functions is a periodic series which can be written as a Fourier series:

$$\sum_{l=-\infty}^{\infty} g_{pa}\left(l\frac{T_r}{h}\right)e^{-j2\pi(m+Q)\frac{l}{h}} = \int_{-\infty}^{\infty} g_{pa}(t)e^{-j(m+Q)\omega_r t}\left(\sum_{l=-\infty}^{\infty}\frac{h}{T_r}e^{-jlh\omega_r t}\right)dt \tag{51}$$

$$\sum_{l=-\infty}^{\infty} g_{pa}\left(l\frac{T_r}{h}\right)e^{-j2\pi(m+Q)\frac{l}{h}} = \frac{h}{T_r}\sum_{l=-\infty}^{\infty}\int_{-\infty}^{\infty} g_{pa}(t)\,e^{-j(lh+m+Q)\omega_r t}dt \tag{52}$$

The integral is just the Fourier transform of the power amplifier (plus the D/A pulse and kicker response):

$$\sum_{l=0}^{\infty} g_{pa}\left(l\frac{T_r}{h}\right)e^{-j2\pi(m+Q)\frac{l}{h}} = \frac{h}{T_r}\sum_{l=0}^{\infty}\tilde{g}_{pa}\left((lh+m+Q)\omega_r\right) \tag{53}$$

Substituting this result into Eqn. 49

$$\sum_{m=0}^{h} \Delta b_m e^{j2\pi mi/h} = \sum_{m=0}^{h} b_m e^{j2\pi mi/h} \cdot j\frac{e^{-j\psi}\sin(\pi Qy)}{g_{pa}(0)N_{turns}}\frac{h}{T_r}\sum_{l=-\infty}^{\infty}\tilde{g}_{pa}\left((lh+m+Q)\omega_r\right) \tag{54}$$

Because of the $2\pi mi/h$ phase term, Eqn. 54 must hold true term by term. Therefore, following the procedure outlined in Eqns. 23-25, the damping rate ($1/\tau_m$) for each coupled bunch mode is:

$$\frac{1}{\tau_m} = \frac{\sin(\pi Qy)}{g_{pa}(0)N_{turns}}\frac{h}{T_r^{\,2}}\sum_{l=-\infty}^{\infty}\mathrm{Re}\left(\tilde{g}_{pa}\left((lh+m+Q)\omega_r\right)\right) \tag{55}$$

From Eqn. 44:

$$\tilde{g}_{pa}(\omega) = 2\pi G_{pa}\frac{R_k(\omega)R_{pa}(\omega)V_D(\omega)}{\int_{-\infty}^{\infty} V_D(\omega)d\omega} \tag{56}$$

Substituting Eqns. 56 into Eqn. 55, the coupled bunch mode growth rate is:

$$\frac{1}{\tau_m} = \frac{\sin(\pi Qy)}{N_{turns}T_r}K_{pa}(m) \tag{57}$$

where:

$$K_{pa}(m) = h\omega_r\frac{\mathrm{Re}\left(\sum_{l=-\infty}^{\infty} R_k\left(\omega_{mql}\right)R_{pa}\left(\omega_{mql}\right)V_D\left(\omega_{mql}\right)\right)}{\int_{-\infty}^{\infty} V_D(\omega)d\omega} \tag{58}$$

and:

$$\omega_{mql} = (lh + m + Q)\omega_r \tag{59}$$

If the power amplifier and the kicker have infinite bandwidth, then K_{pa} will approach unity. As an example, consider a two pole Butterworth amplifier has a frequency response:

$$R_{pa}(\omega) = \frac{e^{j\sqrt{2}\frac{\omega}{2\pi f_{3dB}}}}{1 - \left(\frac{\omega}{2\pi f_{3dB}}\right)^2 + j\sqrt{2}\frac{\omega}{2\pi f_{3dB}}} \tag{60}$$

where f_{3dB} is the 3dB cut-off frequency. Above the cut-off frequency, the amplifier will fall at 12dB/octave. **(<u>Important Note:</u> The delay of the amplifier is taken out by the phase factor in the numerator of Eqn. 60.)** The frequency response of the D/A pulse is:

$$V_D(\omega) = \frac{\sin\left(\pi \frac{\omega}{2\pi f_{clock}}\right)}{\pi \frac{\omega}{2\pi f_{clock}}} \tag{61}$$

where f_{clock} is the frequency of the D/A clock (which would be 40 MHz for the SPS). The kicker response is:

$$R_k(\omega) = \frac{\sin\left(\omega \frac{L_k}{c}\right)}{\omega \frac{L_k}{c}} \tag{62}$$

where c is the velocity of light.

The effective damping gain, K_{pa}, is plotted as a function of mode number for two different amplifier bandwidths in Fig. 9. A lower frequency amplifier actually enhances the damping rate of the lower mode numbers because the kicker pulse from each bunch overlaps and adds to the next kicker pulse. However, at high mode numbers, adjacent kicker pulses actually subtract from one another and the damping gain is reduced. Figure 10 shows K_{pa} for mode 0 (the lowest frequency mode) and mode 462 (the highest frequency mode) for different amplifier bandwidths. For mode 462, the betatron phase difference of adjacent bunches is 180°. This would be the worst possible case of a bunch by bunch damper system. Figure 10 shows that the power amplifier bandwidth should be greater than 20 MHz. Finally, Figure 11 shows the pulse shape of an amplifier with a 20 MHz bandwidth, a D/A clock of 40 MHz, and a kicker length of 1.50m. The pulse width at the base is about 50 nS.

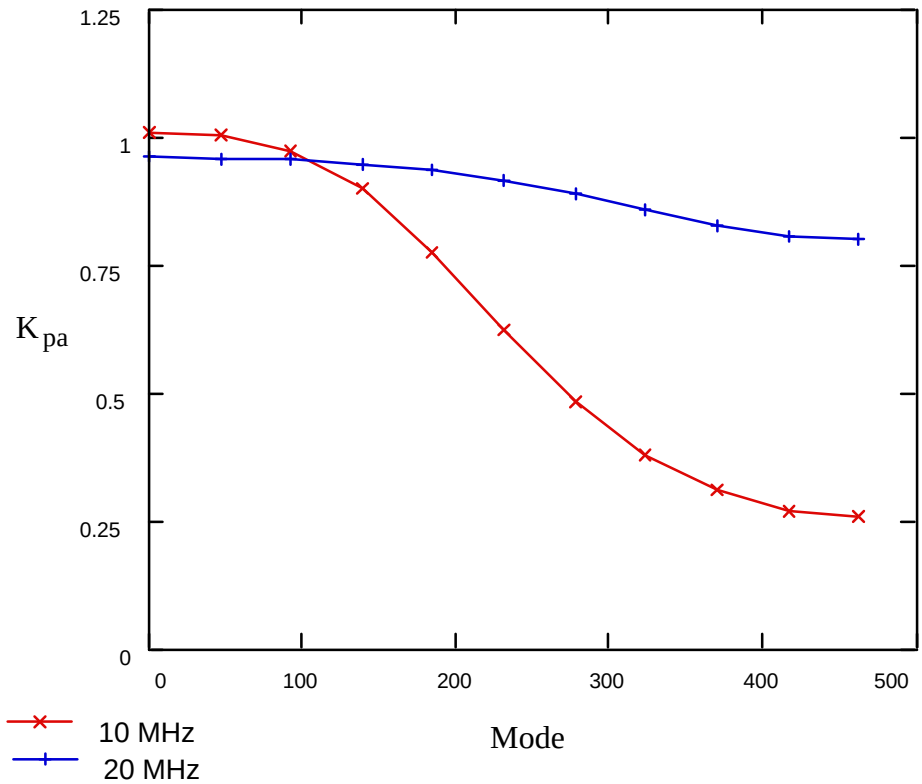

Figure 9. Effective damping gain versus coupled bunch mode number for two different amplifier bandwidths.

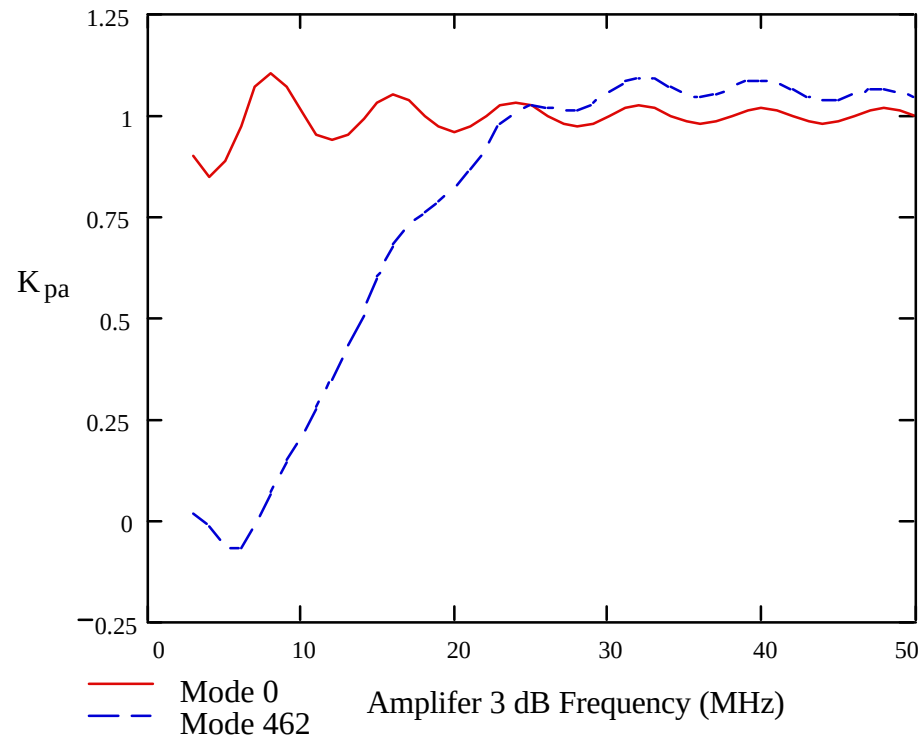

Figure 10. Effective damping gain verses amplifier cut-off frequency for the lowest and highest modes.

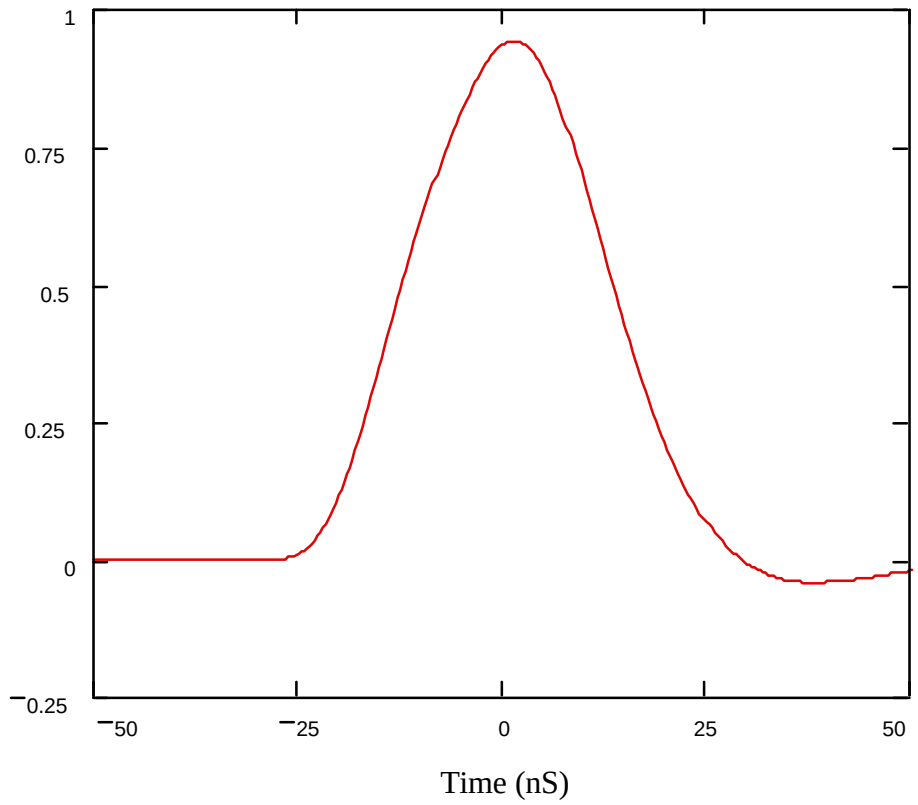

Figure 11. Kicker pulse shape for a 20 MHz amplifier including the D/A pulse and kicker response.

Noise Power

The previous section concentrated on the high end of the dynamic range of the damper system. Before the gain configuration of the damper system can be determined, the noise properties of the damper or the low end of the dynamic range must be calculated. The noise of the damper system will cause emittance growth due to the random kicks. The change in betatron amplitude shown in Eqn. 21 for many turns becomes:

$$\Delta(a) = \sum_n \Delta a(nT_r) = j\sqrt{\beta_k} \sum_n \theta(nT_r) e^{-jQ\omega_r nT_r} \tag{63}$$

Following the steps outlined in Eqns. 50 - 53, Eqn. 63 becomes:

$$\Delta(a) = \frac{j\sqrt{\beta_k}}{T_r} \sum_m \int_{-\infty}^{\infty} \theta(t) e^{-j(m+Q)\omega_r t} dt \tag{64}$$

$$\Delta(a) = \frac{j\sqrt{\beta_k}}{T_r} \sum_m \tilde{\theta}((m+Q)\omega_r) \tag{65}$$

where the ~ denotes the Fourier transform. The phase space area enclosed by the betatron vector is proportional to the magnitude of the betatron amplitude squared.

$$\Delta|a|^2 = \beta_k f_r^2 \sum_m \sum_n \tilde{\theta}((m+Q)\omega_r) \tilde{\theta}^*((n+Q)\omega_r) \tag{66}$$

The derivative of the betatron amplitude as a function of time can be found taking the limit of:

$$\frac{d|a|^2}{dt} = \lim_{T\to\infty} \frac{\Delta|a|^2}{T} \tag{67}$$

$$\frac{d|a|^2}{dt} = \lim_{T\to\infty} \beta_k f_r^2 \sum_m \sum_n \tilde{\theta}((m+Q)\omega_r) \frac{1}{T} \tilde{\theta}^*((n+Q)\omega_r) \tag{68}$$

Because the phase of the terms m ≠n will average to zero as T→∞, the only terms that will contribute to the sum are m=n. Equation 68 becomes:

$$\frac{d|a|^2}{dt} = \beta_k f_r^2 \sum_n \lim_{T\to\infty} \frac{1}{T} \left|\tilde{\theta}((n+Q)\omega_r)\right|^2 \tag{69}$$

Power Spectral Density

Before we go any further, we need to define power spectral density. Assume a noise source is a function of time. This function of time can be written as the inverse Fourier transform of the noise spectrum:

$$v_n(t) = \frac{1}{2\pi}\int_{-\infty}^{\infty} V_n(\omega)e^{j\omega t}d\omega \tag{70}$$

The average power is:

$$\langle P_n(t)\rangle = \lim_{T\to\infty}\frac{1}{T}\int_{-T/2}^{T/2} P_n(t)\,dt = \lim_{T\to\infty}\frac{1}{T}\int_{-T/2}^{T/2}\frac{(v_n(t))^2}{Z_o}dt \tag{71}$$

Using Eqn. 70:

$$\langle P_n(t)\rangle = \lim_{T\to\infty}\frac{1}{T}\frac{1}{Z_o(2\pi)^2}\int_{-T/2}^{T/2}\int_{-\infty}^{\infty}\int_{-\infty}^{\infty} V_n(\omega_1)V_n(\omega_2)e^{j(\omega_1+\omega_2)t}d\omega_2 d\omega_1 dt \tag{72}$$

Using the Fourier identity:

$$\delta(\omega) = \frac{1}{2\pi}\int e^{j\omega t}dt \tag{73}$$

Equation 72 becomes:

$$\langle P_n(t)\rangle = \lim_{T\to\infty}\frac{1}{T}\frac{1}{Z_o 2\pi}\int_{-\infty}^{\infty} V_n(\omega)V_n(-\omega)d\omega \tag{74}$$

Since $v_n(t)$ is a real function:

$$V_n(-\omega) = (V_n(\omega))^* \tag{75}$$

Equation 74 becomes:

$$\langle P_n(t)\rangle = \int_{-\infty}^{\infty}\lim_{T\to\infty}\frac{1}{T}\frac{|V_n(2\pi f)|^2}{Z_o}df = \int_{-\infty}^{\infty} S_n(f)df \tag{76}$$

The Spectral Density of the noise is:

$$S_n(f) = \lim_{T\to\infty}\frac{1}{T}\frac{|V_n(2\pi f)|^2}{Z_o} \tag{77}$$

At the output of the digitizer the spectral density will have a spectrum of the form:

$$S_D(f) = \frac{\langle P_k\rangle}{G_{pa}^2}\frac{|V_D(2\pi f)|^2}{\int_{-\infty}^{\infty}|V_D(2\pi f)|^2 df} \tag{78}$$

The quantity $<P_k>/G_{pa}^2$ is the total average noise power coming out of the digitizer.

$$\langle P_k \rangle = \frac{\left(G_{pa} V_{bit}\right)^2}{Z_o} + \left(g_e \sin(\pi Q y)\right)^2 \langle P_{pu_{noise}} \rangle \tag{79}$$

where V_{bit} is the voltage of the least significant bit and $<P_{pu_{noise}}>$ is the average noise coming out of the pickup hybrid in Fig. 2. The pickup noise $<P_{pu_{noise}}>$ will most likely be dominated by the noise of the closed orbit suppression module. Note that the noise voltage of the closed orbit suppression module can be translated to the pickup hybrid by dividing the noise voltage by the closed orbit suppression module gain.

The spectral noise density of the kicker angle must include the frequency response of the power amplifier and the kicker:

$$S_\theta(\omega) = \theta_{ns}^2 \frac{dK_\theta}{df} \tag{80}$$

where:

$$\theta_{ns} = \frac{d\theta_k}{dV_k} \sqrt{Z_k \langle P_k \rangle} \tag{81}$$

$$\frac{dK_\theta(\omega)}{df} = \frac{\left|R_k(\omega) R_{pa}(\omega) V_D(\omega)\right|^2}{\int_{-\infty}^{\infty} \left|V_D(\omega)\right|^2 df} \tag{82}$$

Equation 69 becomes:

$$\frac{d|a|^2}{dt} = f_r^2 \beta_k \theta_{ns}^2 \sum_m \frac{dK_\theta\left((m+Q)\omega_r\right)}{df} \tag{83}$$

Also, the normalized phase space area enclosed by the betatron amplitude **a** is:

$$\varepsilon_n = \gamma\beta\pi|a|^2 \tag{84}$$

where $\gamma\beta$ are the relativistic factors. The normalized emittance growth rate is:

$$\frac{1}{\pi}\frac{d\varepsilon_n}{dt} = \gamma\beta f_r^2 \beta_k \theta_{ns}^2 \sum_{m=-\infty}^{\infty} \frac{dK_\theta\left((m+Q)\omega_r\right)}{df} \tag{85}$$

If the noise density is fairly uniform over a revolution line, than the sum in Eqn. 85 can be replaced with an integral:

$$\frac{1}{\pi}\frac{d\varepsilon_n}{dt} = \gamma\beta f_r \beta_k \theta_{ns}^2 K_\theta \tag{86}$$

The parameter K_θ is plotted in Fig 12 as a function of amplifier bandwidth. If the kicker bandwidth is very large, then K_θ will approach unity. However, K_θ in Fig. 12 approaches 0.85 because a kicker length of 1.536 m was used in the calculation. Using an amplifier bandwidth of 20 MHz and from Table 1, the emittance growth rate at injection is 0.63 π-mm-mrad/sec-kW for the horizontal plane and is 2.1 π-mm-mrad/sec-kW for the vertical plane.

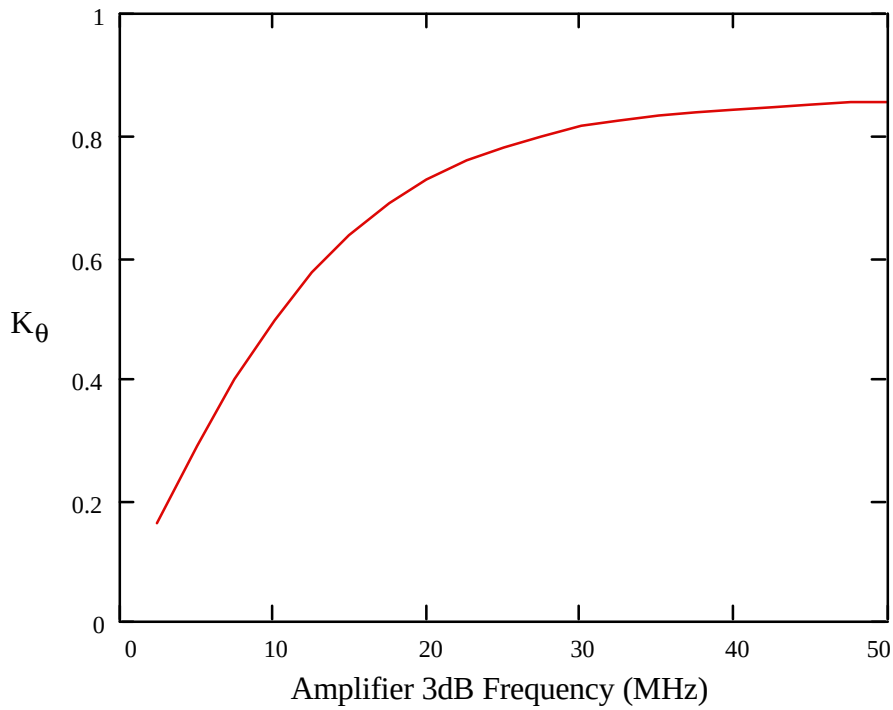

Figure 12. Emittance growth noise factor vs. amplifier bandwidth.

Signal Suppression

Equation 86 is true if the damper feedback loop is open so that only noise is being applied to the beam and there is no damping. For example, this would be the case if the pickup was disconnected. However, if the damper loop is closed, than the kicker noise that is transmitted to the beam will be sensed by the pickup and the damper will act to reduce this signal or the signal will be suppressed. Because noise acts over a bandwidth and not concentrated at a single frequency, the width of the beam spectrum has to be included in this analysis.

If the beam is given an transverse impulse kick, it will oscillate transversely at the betatron frequency. If the individual particles in the beam each have a slightly different betatron tune, then eventually the betatron phases of all the different particles will randomize and the beam centroid will no longer seem to oscillate. The particle distribution has smeared out or decohered in phase space. If the tune spread is small compared to the average betatron frequency, then the betatron amplitude of the beam as awhole will oscillate according to:

$$A(t) = A_o e^{-\frac{t}{T_{dc}}} \sin(Q\omega_r t) \tag{87}$$

where T_{dc} is the decoherence time. This time domain response has a Laplace transform of the following:

$$\tilde{A}(s) \propto \frac{\frac{2}{T_{dc}} s}{s^2 + \frac{2}{T_{dc}} s + (Q\omega_r)^2} \tag{88}$$

The bandwidth of this response is:

$$\text{Bandwidth} = \frac{2}{T_{dc}} = \Delta Q \omega_r \tag{89}$$

or the decoherence time can be written as:

$$N_{dc} = \frac{T_{dc}}{T_r} = \frac{1}{\pi \Delta Q} \tag{90}$$

where N_{dc} is the number of turns it takes the beam to decohere.

The damper system acting with the beam can be represented as a negative feedback system as shown in Fig. 13. The damper system in Fig. 13 only includes the gain electronics G_e. (The effect of the notch filter and a multi-turn delay have been neglected.) The beam transfer function includes not only the beam but the action of the pickup and kicker electrodes as well. The overall system transfer function is:

$$\frac{V_{out}}{V_{in}} = \frac{G_e}{1 + G_e B(s)} \tag{91}$$

where the beam transfer function has the form:

$$B(s,Q) = \frac{je^{-j\phi_{pk}}}{G_e N_{turns} T_r} \frac{s}{s^2 + \frac{2}{N_{dc} T_r} s + (Q\omega_r)^2} \tag{92}$$

where $G_e N_{turns}$ is given by Eqn. 18. Substituting Eqn. 92 into Eqn. 91:

$$\frac{V_{out}}{V_{in}} = \frac{G_e \left(s^2 + \frac{2}{N_{dc} T_r} s + (Q\omega_r)^2 \right)}{s^2 + \frac{2}{T_r} \left(\frac{1}{N_{dc}} + \frac{je^{-j\phi_{pk}}}{N_{turns}} \right) s + (Q\omega_r)^2} \tag{93}$$

At $s = jQ\omega_r$, the overall transfer function is:

$$\left. \frac{V_{out}}{V_{in}} \right|_{s = \pm jQ\omega_r} = \frac{G_e}{1 + \frac{N_{dc}}{N_{turns}}} \tag{94}$$

Equation 94 shows that when any signal (including noise) is supplied to the damper, the signal becomes suppressed at the betatron frequencies when the damper loop is closed. The emittance growth rate shown in Eqn. 86 must be multiplied by the signal suppression factor:

$$\frac{1}{\pi}\frac{d\varepsilon_n}{dt} = \gamma\beta f_r \beta_k \left(\frac{\theta_{ns}}{1+\frac{N_{dc}}{N_{turns}}} \right)^2 K_\theta \tag{95}$$

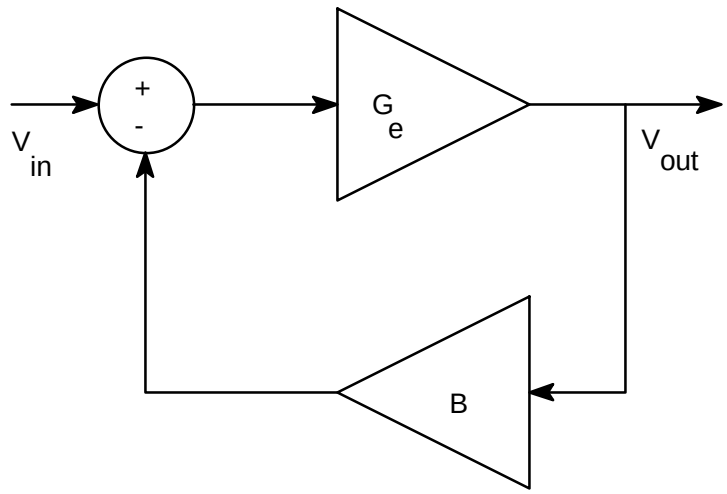

Figure 13. Beam - Damper negative feedback system.

Gain Distribution

To determine the gain distribution, a specific block diagram of the damper system must be chosen. The one chosen in this paper is shown Fig. 14. There are two major constraints on the layout of the gain blocks. The first is the maximum voltage at the digitizer due to an injection oscillation. The voltage at the digitizer is given by Eqn. 13. We will assume that the closed orbit suppression module eliminates the closed orbit voltage at the digitizer so that the only voltage present is due to injection oscillations. The digitizer will have a maximum voltage level that if exceeded will damage the digitizer. Since the gain of the closed orbit suppression module is:

$$g_{cos} = \frac{1}{2} g_{At\Delta} \tag{96}$$

where $g_{At\Delta}$ is the gain of the AtΔ attenuatior (<1), the product of the pulse gain and the gain of the attenuator is:

$$g_{At\Delta} g_{pulse} = \frac{\sqrt{2} V_{A/D_{max}}}{g_{pu} g_m \frac{Z_o}{2} \left(\left(i_b\left(t+\frac{L_{pu}}{c}\right) + i_b\left(t-\frac{L_{pu}}{c}\right) \right) * f(t) \right)\Big|_{t=0} \frac{x_{pu_{inj}}}{d_{pu}}} \tag{97}$$

For noise purposes, it is desirable to make $g_{At\Delta}$ as close to 0dB as possible and it will be assumed that the minimum value of g_{pulse} is 0dB. These three conditions will determine the values of these gains.

The second major constraint on the layout of the gain blocks is the voltage that the closed orbit suppression module must remove. This voltage is:

$$V_{co} = \sqrt{2} g_{pu} g_{At\Delta} \frac{Z_o}{2} i_b(0) \frac{x_{pu_{co}}}{d_{pu}} \tag{98}$$

Note that the beam current response is not convolved with the filter because this voltage is measured before the filter. Because the closed orbit multiplier has a maximum voltage (which can be increased by the amplifier G_{mco}), the $At\Delta$ attenuator must be set so that the pickup signal does not exceed this voltage.

$$g_{At\Delta} = \frac{G_{mco} V_{AD834_{max}}}{\sqrt{2} g_{pu} \frac{Z_o}{2} i_b(0) \frac{x_{pu_{co}}}{d_{pu}}} \tag{99}$$

A reasonable value for G_{mco} is 20 dB and for $V_{AD834_{max}}$ is 0.3V.

The gain of the power amplifier (which includes the difference mode hybrid for driving each kicker plate) is:

$$G_{pa} = \frac{2 g_e}{g_m g_{At\Delta} g_{pulse}} \tag{100}$$

Finally, the noise power at the kicker can be determined:

$$\langle P_k \rangle = \frac{\left(G_{pa} V_{bit}\right)^2}{Z_o} + \left(\frac{g_e G_{mco}}{g_{At\Delta}} \sin(\pi Q y) \right)^2 S_{AD834} W_f \tag{101}$$

where S_{AD834} is the noise spectral density of the closed orbit multiplier (-147 dBm/Hz for the AD834) and W_f is the bandwidth of the front end (80 MHz).

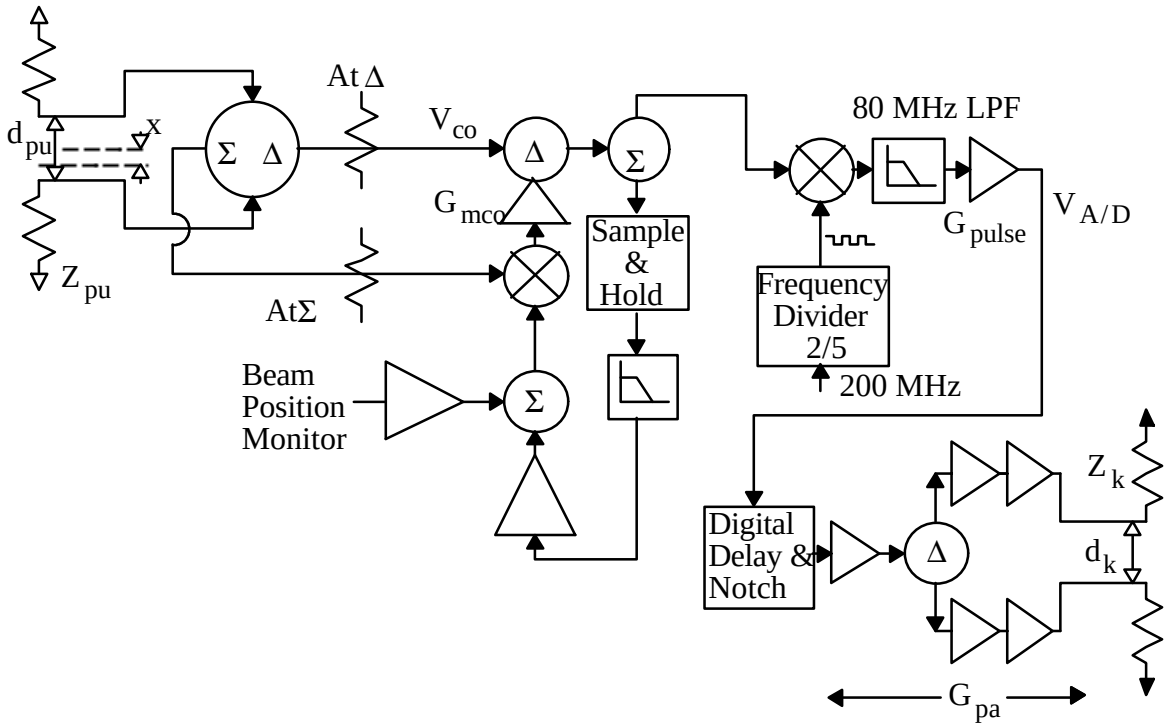

Figure 14. Total system diagram of the bunch by bunch damper.

Damper Design

Using the parameters from Table 1 and the preceding formulas, a number of design possibilities are presented in Table 3. It was assumed that the kicker bandwidth exceeds 20 MHz, the digitizer resolution is 8 bits, the pickup center frequency and the pulse shaping low pass filter bandwidth is 80 MHz. The first parameter to be specified is the linear damping time that is desired. To be conservative, a damping time of 4 turns was chosen. Also a damping time of 32 turns (which is equal to the decoherence time) was also evaluated.

For injection damping, the injection oscillation amplitude that could be damped in one decoherence time for the given kicker voltage was calculated by inverting Eqn. 32. With this constraint, oscillation amplitudes of only a few millimeters are permitted. If an injection oscillation of 1.9 mm at the pickup (β=100m) was not damped and allowed to decohere, the normalized emittance would increase by 1.0 π-mm-mrad (5.5 mm oscillation correlates to a normalized emittance growth of 8.4 π-mm-mrad) . In principle, one would want the saturated damping time much shorter than the decoherence time. To alleviate this constraint one could increase the kicker voltage (or decrease the kicker aperture) or reduce the tune spread so that larger oscillations are permitted. Also, the estimate for the kicker sensitivity of 0.66 might be too pessimistic.

The noise properties of the dampers does not look like a problem at injection. There is a fairly large input attenuator (25.6 dB) to keep the closed orbit voltage from exceeding the AD834 multiplier output. This attenuator could be reduced by reducing the closed orbit excursion specification or by increasing the gain of the amplifier immediately after the AD834 multiplier (G_{mco}). One has to be careful about increasing G_{mco} because the noise of the front end is dominated by the AD834. Because of the large input attenuator, one could argue that a lower impedance capacitive pickup could be used in place of the stripline. The gain on the front end is also kept low because of the fairly tight specification of the maximum voltage into the digitizer. If this specification was increased, then more gain could be shifted to the front end. In Table 3, $R_{fe/bit}$ is the ratio of the noise due to the front end to the bit noise evaluated

at the kicker. If this ratio is above 0 dB, then nothing is gained by shifting more gain to the front end.

If the same damping time is required at high energy that is used at injection, then the electronic gain must be increased by 25 dB during the acceleration cycle to combat the decrease in kicker strength (See Table 2.). If this gain is added downstream of the digitizer, then the kicker angle noise θ_n is independent of energy (See Eqn. 81). However, the normalized emittance growth rate will increase with energy (a factor of 17 from injection to extraction) because of the factor of γ that must be used in converting to normalized emittance (See Eqn. 86).

Plane		Vertical	Vertical	Horizontal	Horizontal
Energy	GeV	26	26	26	26
d_{pu}, d_k	mm	38	38	142	142
$V_{A/Dmax}$	V	2	2	2	2
V_{834max}	V	0.3	0.3	0.3	0.3
N_{turns}		4	32	4	32
N_{sat}		32	32	32	32
N_{dc}		32	32	32	32
W_f	MHz	80	80	80	80
$i_b(0)$	A	8.2	8.2	8.2	8.2
$i_b*f\|_{t=0}$	A	3.6	3.6	3.6	3.6
g_e	dB	64	46	85	67
x_{inj}	mm	5.5	5.5	1.9	1.9
$g_{At\Delta}$	dB	-25.6	-25.6	-25.6	-25.6
g_{pulse}	dB	22	22	42	42
G_{pa}	dB	80.1	62.1	80.1	62.1
G_{mco}	dB	20	20	20	20
$<P_k>$	Watts	140	2.2	1820	29
$R_{fe/bit}$	dB	-9.0	-9.0	11	11
Sig. Supr.	dB	19	6	19	6
$d\varepsilon/dt$	πmm-mrad	.019	.006	.029	.009

Table 3. Damper parameters for injection into the SPS.
Column 4 is the same as Column 3 and Column 6 is the same as Column 5 except the damping time was changed from 4 turns to 32 turns.

Appendix A

Summary of Equations

Beam current response after it has been filtered:

$$i_b(t)*f(t) = \frac{qN_b}{\sqrt{2\pi\left(\sigma_b{}^2 + \sigma_f{}^2\right)}} e^{-\frac{1}{2}\frac{t^2}{\left(\sigma_b{}^2+\sigma_f{}^2\right)}} \tag{A1}$$

$$\sigma_f = \frac{1}{2\pi W_f} \tag{A2}$$

To hold true, the falloff of the filter should be at least 12 dB/octave.

The kicker deflection angle:

$$\theta_k = 2g_k \frac{L_k}{d_k}\frac{q}{pc} = \frac{d\theta_k}{dV_k} V_k \tag{A3}$$

Betatron amplitude as a function of time for a linear damper:

$$\frac{x_{pu}(t)}{\sqrt{\beta_{pu}}} = a(t) = a_o e^{-\frac{t}{N_{turns}T_r}} \tag{A4}$$

$$\frac{1}{g_e N_{turns}} = \frac{1}{\sqrt{2}} g_{pu} \frac{Z_o}{2}\left(\left(i_b\left(t+\frac{L_{pu}}{c}\right)+i_b\left(t-\frac{L_{pu}}{c}\right)\right)*f(t)\right)\Bigg|_{t=0} \frac{d\theta_k}{dV_k}\frac{\sqrt{\beta_{pu}\beta_k}}{d_{pu}} \tag{A5}$$

Betatron amplitude as a function of time for a saturated damper:

$$a(t) = \frac{x_{inj}}{\sqrt{\beta_{inj}}}\left(1-\frac{t}{N_{sat.}T_r}\right) \tag{A6}$$

The damping time is:

$$N_{sat.} = \frac{\pi}{2}\frac{x_{inj}}{\sqrt{\beta_{inj}\beta_k}}\frac{1}{\frac{d\theta_k}{dV_k}V_{k\,max}} \tag{A7}$$

Decoherence 1/e time:

$$T_{decoh} = \frac{T_{rev}}{\pi\Delta Q} = N_{dc}T_{rev} \tag{A8}$$

Phase advance between pickup to kicker needed for a damper with an **x** turn delay and a **y** turn notch:

$$\phi_{pk} = \pi(m - Q(2x - y)) \tag{A9}$$

where m= any integer.

Coupled bunch mode **m** damping time:

$$\frac{1}{\tau_m} = \frac{\sin(\pi Q y)}{N_{turns} T_r} K_{pa}(m) \tag{A10}$$

$$K_{pa}(m) = h\omega_r \frac{\mathrm{Re}\left(\sum_{l=-\infty}^{\infty} R_k(\omega_{mq_l}) R_{pa}(\omega_{mq_l}) V_D(\omega_{mq_l})\right)}{\int_{-\infty}^{\infty} V_D(\omega)\, d\omega} \tag{A11}$$

$$\omega_{mq_l} = (lh + m + Q)\omega_r \tag{A12}$$

where the bunch spacing is T_r/h.

Normalized stripline kicker responsewith zero group delay:

$$R_k(\omega) = \frac{\sin\left(\omega \frac{L_k}{c}\right)}{\omega \frac{L_k}{c}} \tag{A13}$$

Normalized Butterworth 12dB/octave filter with zero group delay:

$$R_{pa}(\omega) = \frac{e^{j\sqrt{2}\frac{\omega}{2\pi f_{3dB}}}}{1 - \left(\frac{\omega}{2\pi f_{3dB}}\right)^2 + j\sqrt{2}\frac{\omega}{2\pi f_{3dB}}} \tag{A14}$$

Normalized frequency response of the D/A pulse with zero group delay:

$$V_D(\omega) = \frac{\sin\left(\pi \frac{\omega}{2\pi f_{clock}}\right)}{\pi \frac{\omega}{2\pi f_{clock}}} \tag{A15}$$

Normalized emittance growth rate due to noise power:

$$\frac{1}{\pi}\frac{d\varepsilon_n}{dt} = \gamma\beta f_r{}^2\beta_k\theta_{ns}{}^2 \sum_{m=-\infty}^{\infty} \frac{dK_\theta((m+Q)\omega_r)}{df} \tag{A16}$$

$$\frac{dK_\theta(\omega)}{df} = \frac{\left|R_k(\omega)R_{pa}(\omega)V_D(\omega)\right|^2}{\int_{-\infty}^{\infty}\left|V_D(\omega)\right|^2 df} \tag{A17}$$

$$\theta_{ns} = \frac{d\theta_k}{dV_k}\sqrt{Z_k\langle P_k\rangle} \tag{A18}$$

$$\langle P_k\rangle = \frac{\left(G_{pa}V_{bit}\right)^2}{Z_o} + \left(g_e\sin(\pi Qy)\right)^2\left\langle P_{pu_{noise}}\right\rangle \tag{A19}$$

Emittance growth due to uniform noise:

$$\frac{1}{\pi}\frac{d\varepsilon_n}{dt} = \gamma\beta f_r\beta_k\theta_{ns}{}^2K_\theta \tag{A20}$$

including signal suppression:

$$\frac{1}{\pi}\frac{d\varepsilon_n}{dt} = \gamma\beta f_r\beta_k\left(\frac{\theta_{ns}}{1+\frac{N_{dc}}{N_{turns}}}\right)^2 K_\theta \tag{A21}$$

Gain of front end electronics (See Figure 14):

$$g_{At\Delta}g_{pulse} = \frac{\sqrt{2}V_{A/D_{max}}}{g_{pu}g_m\frac{Z_o}{2}\left(\left(i_b\left(t+\frac{L_{pu}}{c}\right)+i_b\left(t-\frac{L_{pu}}{c}\right)\right)*f(t)\right)\Big|_{t=0}\frac{x_{pu_{inj}}}{d_{pu}}} \tag{A22}$$

$$g_{At\Delta} = \frac{G_{mco}V_{AD834_{max}}}{\sqrt{2}g_{pu}\frac{Z_o}{2}i_b(0)\frac{x_{pu_{co}}}{d_{pu}}} \tag{A24}$$

$$G_{pa} = \frac{2g_e}{g_m g_{At\Delta}g_{pulse}} \tag{A23}$$

Noise power at the kicker :

$$\langle P_k\rangle = \frac{\left(G_{pa}V_{bit}\right)^2}{Z_o} + \left(\frac{g_eG_{mco}}{g_{At\Delta}}\sin(\pi Qy)\right)^2 S_{AD834}W_f \tag{A25}$$

Appendix B

Symbols

N_b	number of particles in a bunch
q	electric charge
$4\sigma_b$	bunch length at the base
W_f	3dB band width of the filter
g_k	sensitivity of the kicker,
V_k	kicker voltage
L_k	length of the kicker
d_k	aperture of the kicker
p	beam momentum.
T_r	revolution period
g_{pu}	sensitivity of the pickup
Z_o	impedance of the pickup
d_{pu}	pickup aperture
L_{pu}	pickup length
g_e	total damper electronic gain
β_{pu}	pickup beta function
β_k	kicker beta function
Q	betatron tune
ϕ_{pk}	phase advance between pickup to kicker
ω_r	revolution frequency in radian/sec
c	velocity of light
f_{clock}	frequency of digitizer clock in Hz
f_{3dB}	3 dB cutoff frequency of amplifier
γ	ratio of particle mass to rest mass
β	ratio of particle velocity to the velocity of light
G_{pa}	maximum gain of the power amplifier chain
V_{bit}	resolution of the digitizer
$<P_{pu_{noise}}>$	Equivalent noise power of the damper front end referenced to the output of the pickup hybrid
Z_k	impedance of the kicker
g_m	Conversion gain of pulse shaping mixer
$V_{A/Dmax}$	Maximum voltage before the A/D is destroyed
$V_{AD834max}$	Maximum output voltage of the closed orbit suppression multiplier
S_{AD834}	Noise power spectral density of the closed orbit suppression multiplier