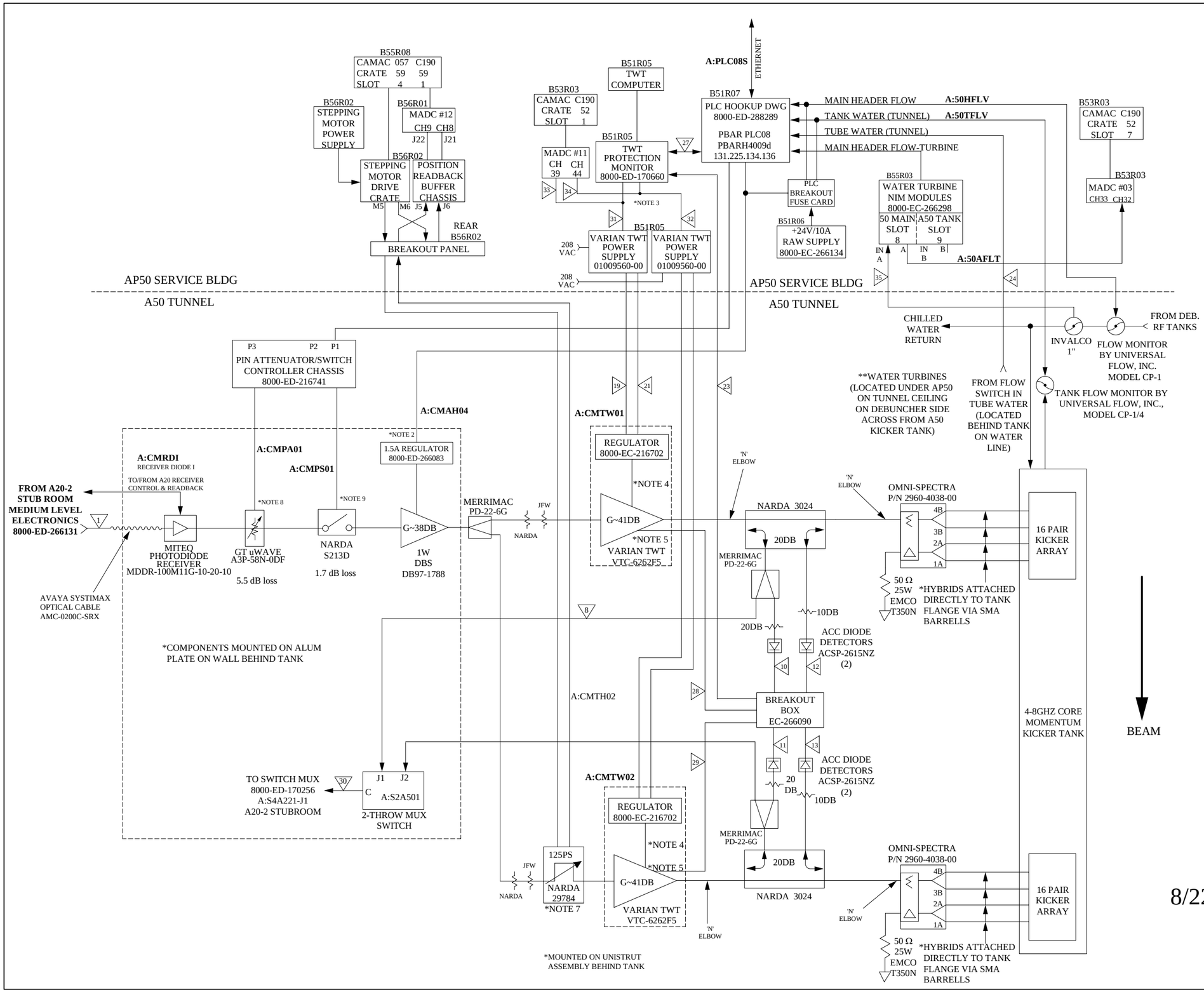

REV.	DESCRIPTION	DRAWN / APPD.	DATE
A	ADDED TWT HELIX VOLTAGE MADC	T.P.S.	2/11/91
		WES MUELLER	2/15/91
B	TWT TIMING	G.A. JOHNSON	9/19/91
		WES MUELLER	9/24/91
C	TURBINES ADDED IN CHILLED LCW	G.A. JOHNSON	7/20/94
		WES MUELLER	7/25/94
D	ADDED WATER FLOW MADC CHANNELS AND REDRAWN	WES MUELLER	9/11/96
		WES MUELLER	9/11/96
E	NAME/CONTROL CHANGES	WES MUELLER	8/14/98
		WES MUELLER	
F	TROMBONES MOVED WITH TWT CHILL PLATE CHANGE	WES MUELLER	7/30/01
G	RE-MADE HI LEVEL PLATE, OPTIC LINK ACROSS RING, TWTS REMOUNTED	WES MUELLER	4/18/06

NOTES:

1. AMPLIFIER GAINS ARE NOMINAL.
2. AMP REGULATOR BUS HAS ON/OFF CONTROL, HIGH/LOW VOLTAGE STATUS, AND HIGH/LOW CURRENT STATUS.
3. THERE ARE ACTUALLY 4 CABLES BETWEEN TWT SUPPLY AND THE TPMPM. THREE ARE RG58 FOR HELIX MON., HELIX MODULATION, AND REMOTE FAULT. THE FOURTH IS TWO 10C/22GA CABLES TY-RAPPED TOGETHER FOR REMOTE CONTROL AND STATUS.
4. TWT AND REGULATOR ARE MOUNTED ON A WATER COOLED COPPER CHILL PLATE (DWG. #8000-MC-266077) WHICH IS BOLTED TO UNISTRUT BEHIND TANK.
5. KLIXONS ARE BY ELMWOODS SENSORS, MODEL #3100-56-87L250. THEY ARE NORMALLY CLOSED SWITCHES SET TO OPEN AT 250°F, +/- 9°F SWITCHES ARE MOUNTED AT OUTPUT END OF TWT UNDER SHROUD.
6. ATTENUATORS ARE TYPE 'N' BY NARDA, MODEL 773, UNLESS NOTED.
7. WIRES IN TROMBONE READBACK CABLE, TO PINS 7 & 9 ONLY, ARE REVERSED FROM ALL OTHER TROMBONES FOR THE 4-8GHZ NARDA TROMBONES MODEL 29784, AS THEIR LINEAR POT INSIDE IS REVERSED FROM ALL THE OTHERS. REVERSAL IS DONE ON THE TROMBONE END ONLY (TUNNEL SIDE).
8. PIN ATTENUATOR BUS CONSISTS OF 8-BIT TTL DRIVER AND 8-BIT TTL READBACK.
9. PIN SWITCH BUS HAS ONE TTL ON/OFF BIT AND ONE TTL READBACK.

CABLE SCHEDULE

NO.	CABLE NAME	CABLE NO.	SIZE
1	CM TRUNK, MEDIUM TO HIGH	A20-2 TO A50	1/2" HELIAX
2	CM HI LVL, UPSTREAM SPLIT	SPLITTER TO CMTH01	1/2" HELIAX
3	CM HI LVL, DOWNSTREAM SPLIT	SPLITTER TO CMTH02	1/2" HELIAX
4	TROMBONE TO TWT	CMTH01 TO CMTW01	0.141" Cu HARDLINE
5	TROMBONE TO TWT	CMTH02 TO CMTW02	0.141" Cu HARDLINE
6	CMPF01 COUPLER TO HYBRID	CMTW01 TO U.S. HYBRID	1/2" HELIAX
7	CMPF02 COUPLER TO HYBRID	CMTW02 TO D.S. HYBRID	1/2" HELIAX
8	CMPF01 MUX MON.	CMTW01 TO S2A501-J1	1/4" HELIAX
9	CMPF02 MUX MON.	CMTW02 TO S2A501-J2	1/4" HELIAX
10	FWD DIODE TO BREAKOUT BOX	CMTW01 FWD 'A'	RG58
11	FWD DIODE TO BREAKOUT BOX	CMTW02 FWD 'B'	RG58
12	REV DIODE TO BREAKOUT BOX	CMTW01 REV 'A'	RG58
13	REV DIODE TO BREAKOUT BOX	CMTW02 REV 'B'	RG58
14	CONTROL TO REGULATOR	CMAH04	10C/22GA
15	TROMBONE TO BREAKOUT	CMTH01 READBACK	4 TPS/22GA
16	TROMBONE TO BREAKOUT	CMTH02 READBACK	4 TPS/22GA
17	TROMBONE TO BREAKOUT	CMTH01 CONTROL	2 TPS/16GA
18	TROMBONE TO BREAKOUT	CMTH02 CONTROL	2 TPS/16GA
19	TWT HI VOLTAGE CABLE	CMTW01 HV	6C/16GA (15KV)
20	TWT HI VOLTAGE CABLE	CMTW02 HV	6C/16GA (15KV)
21	TWT LOW VOLTAGE CABLE	CMTW01 LV	6C/22GA (600V)
22	TWT LOW VOLTAGE CABLE	CMTW02 LV	6C/22GA (600V)
23	BREAKOUT BOX TO TWTPM	CM DIODES/CHILLS	6 TPS/22GA
24	KICKER PERMIT TO FLOW SWITCH	CM TUBE FLOW	RG58
25	KICKER PERMIT TO FLOW SWITCH	CM TANK FLOW	RG108
26	KICKER PERMIT TO 3 PHASE DET.	CM 208VAC 3PHS	RG58
27	KICKER PERMIT TO TWTPM		RG108
28	BREAKOUT BOX TO TWT	CMTW01 CHILL 'A'	RG108
29	BREAKOUT BOX TO TWT	CMTW02 CHILL 'B'	RG108
30	CM MUX MEDIUM TO HIGH LVL	S4A221 TO S2A501	1/2" HELIAX
31	TWT SUPPLY TO TWTPM	CMTW01	(3) RG58 & (2) 10C/22GA
32	TWT SUPPLY TO TWTPM	CMTW02	(3) RG58 & (2) 10C/22GA
33	TWT HELIX TO MADC #11	CMHVM1	RG58
34	TWT HELIX TO MADC #11	CMHVM2	RG58
35	KICK PERMIT TO MAIN FLOW SW.		RG108

8/22/06

ITEM NO.	PART NO.	DESCRIPTION OR SIZE	QTY. REQ.
PARTS LIST			

UNLESS OTHERWISE SPECIFIED

FRACTIONS	DECIMALS	ANGLES
+/-	+/-	+/-

1. BREAK ALL SHARP EDGES 1/64 MAX.
2. DO NOT SCALE DRAWING
3. DIMENSIONING IN ACCORD WITH ANSI Y14.5 STD'S

MAX. ALL MACHINED SURFACES

ORIGINATOR	R.J. PASQUINELLI	
DRAWN	WESLEY MUELLER	9/24/96
CHECKED		
APPROVED		
USED ON		
MATERIAL-		

FERMI NATIONAL ACCELERATOR LABORATORY
UNITED STATES DEPARTMENT OF ENERGY

ANTI-PROTON SOURCE
CORE MOMENTUM (4-8 GHZ)
HIGH LEVEL ELECTRONICS

SCALE	FILMED	DRAWING NUMBER	REV.
		8000-ED-266132	G