| REV. | DESCRIPTION | DRAWN | DATE |
|---|---|---|---|
| A | | APPD. | DATE |

# Core Betatron Systems - VERTICAL

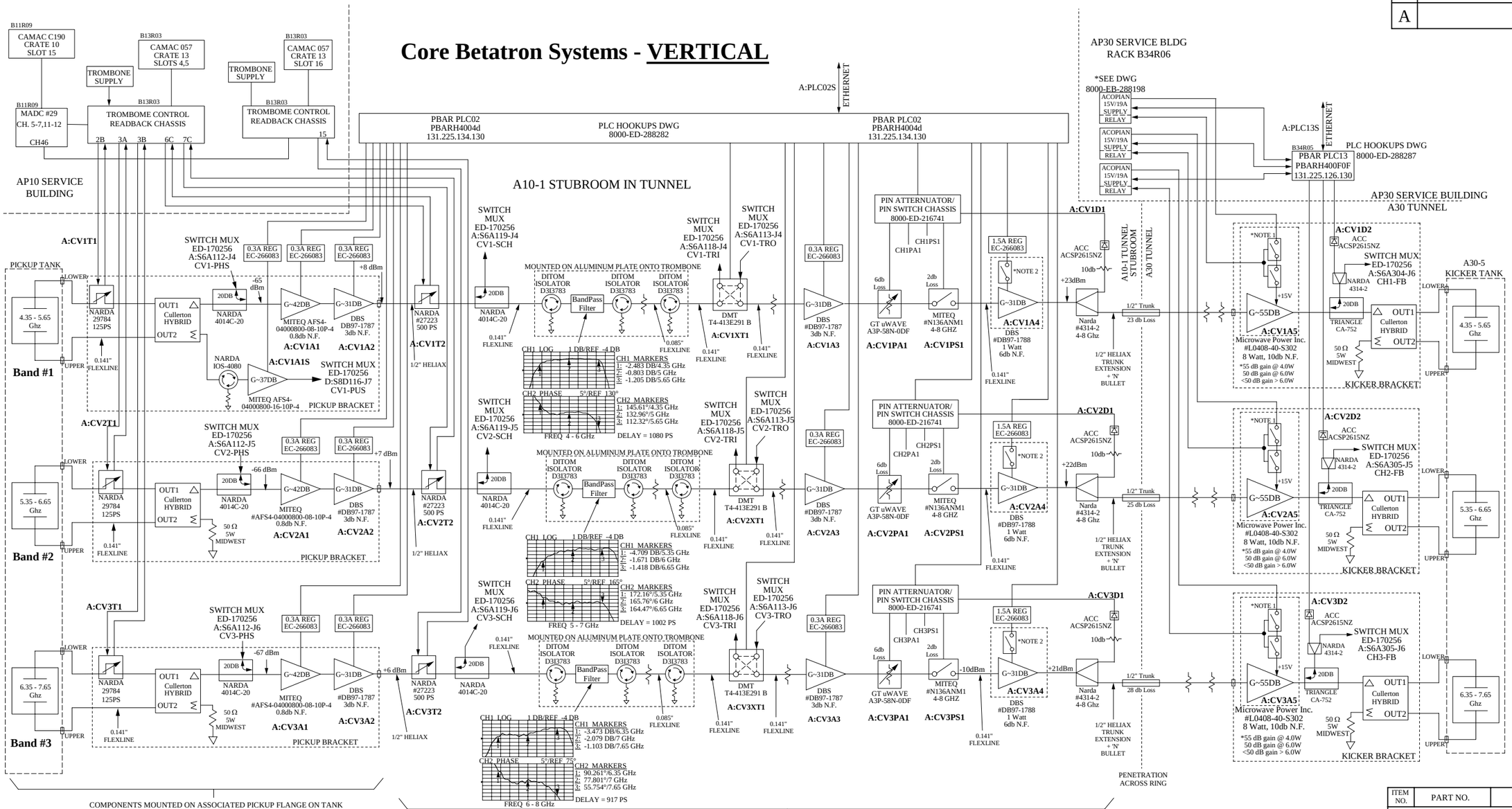


8/8/05

NOTES:
1) TWO TEMPERATURE KLIXONS ARE MOUNTED ON COPPER CHILL PLATE WITH 8W AMP AND OPEN AT 100°F, MODEL #3100-3-1437, FROM ELMWOOD SENSORS. AMP IS WATER COOLED OFF OF OUR AP30 CHILLER WITH ~55°F WATER.
2) TEMPERATURE KLIXONS ARE MOUNTED ON COPPER CHILL PLATE WITH AMP AND OPEN AT 120°F, MODEL #3100-3-1439, FROM ELMWOOD SENSORS. AMP IS WATER COOLED OFF OF ~90°F TUNNEL MAGNET WATER.

| ITEM NO. | PART NO. | DESCRIPTION OR SIZE | QTY. REQ. |
|---|---|---|---|
| | | PARTS LIST | |

| UNLESS OTHERWISE SPECIFIED | | | ORIGINATOR | RALPH PASQUINELLI | |
|---|---|---|---|---|---|
| FRACTIONS | DECIMALS | ANGLES | DRAWN | WES MUELLER | 4/29/02 |
| +/- | +/- | +/- | CHECKED | | |
| 1. BREAK ALL SHARP EDGES 1/64 MAX. | | | APPROVED | | |
| 2. DO NOT SCALE DRAWING | | | USED ON | | |
| 3. DIMENSIONING IN ACCORD WITH ANSI Y14.5 STD'S | | | MATERIAL- | | |
| √ MAX. ALL MACHINED SURFACES | | | | | |

**FERMI NATIONAL ACCELERATOR LABORATORY**
UNITED STATES DEPARTMENT OF ENERGY

ANTI-PROTON SOURCE
4-8 GHZ CORE BETATRON
VERTICAL COOLINGS SYSTEMS

| SCALE | FILMED | DRAWING NUMBER | REV. |
|---|---|---|---|
| | | 8000 - ED - 288202 | |